SKF

Rolling bearings in paper machines



1 General requirements and recommendations

2 Forming section

3 Press section

4 Dryer section

5 Calenders

6 Reeler

7 Lubrication

8 Lubrication examples

9 Maintenance

Rolling bearings in paper machines

Handbook for the paper machine designers and operators

Foreword

This latest version of the SKF® application, lubrication and maintenance handbook for bearings in paper machines has been developed with the various specialists involved in the industry. For the paper machine designer, it includes the information required to select the right bearings and to design optimised arrangements for them. For the specialists working in the paper mills, there are recommendations on how to maximise bearing service life through appropriate mounting and dismounting, maintenance and lubrication procedures.

The recommendations are based on experience gained by SKF during decades of close cooperation with machinery manufacturers and paper mills from all around the world. Working together with the industry has also strongly influenced SKF product development, leading to the introduction of a large number of new products and variants. Many of these have been developed specifically for the paper industry and all are based on the needs of the user.

General information about bearings is contained in the SKF General Catalogue and the SKF Interactive Engineering Catalogue while specific recommendations for paper machines are included in this handbook. Information from the General Catalogue is only included when necessary for the sake of clarity.

Made by SKF® stands for excellence. It symbolises our consistent endeavour to achieve total quality in everything we do. For those who use our products. “Made by SKF” implies three main benefits.

Reliability – thanks to modern, efficient products, based on our worldwide application know-how, optimised materials, forward-looking designs and the most advanced production techniques.

Cost effectiveness – resulting from the favourable ratio between our product quality plus service facilities, and the purchase price of the product.

Market lead – which you can achieve by taking advantage of our products and services. Increased operating time and reduced down-time, as well as improved output and product quality are the key to a successful partnership.



Contents

1 General requirements and recommendations 9

Selection of bearing size 10

Bearing types used in paper machines 13

Housings and journals 18

Oil flow resistance 24

High-speed machines 26

2 Forming section 29

Bearing arrangements 32

3 Press section 39

Bearing arrangements 43

4 Dryer section 51

Bearing arrangements 55

5 Calenders 69

Bearing arrangements 72

6 Reeler 77

Bearing arrangements 78

7 Lubrication 83

Why lubricate? 83

General notes on lubrication 86

Grease lubrication 91

Oil lubrication 95

Cleanliness control 98

8 Lubrication examples 105

9 Maintenance 181

Maintenance philosophies 182

Services and products supplied by SKF 184

Rebuild front side of drying and Yankee cylinders to a CARB® bearing arrangement 185

Mounting and dismounting 186

Condition monitoring 193

Standstill precautions 196

How to store spare bearings 197

How to avoid transport damage 199

Failure modes 200

How to avoid surface damage 207

The SKF Group – a worldwide corporation

SKF is an international industrial Group operating in some 130 countries and is world leader in bearings.

The company was founded in 1907 following the invention of the self-aligning ball bearing by Sven Wingquist and, after only a few years, SKF began to expand all over the world.

Today, SKF has some 40 000 employees and around 80 manufacturing facilities spread throughout the world. An international sales network includes a large number of sales companies and some 7 000 distributors and retailers. Worldwide availability of SKF products is supported by a comprehensive technical advisory service.

The key to success has been a consistent emphasis on maintaining the highest quality of its products and services. Continuous investment in research and development has also played a vital role, resulting in many examples of epoch-making innovations.

The business of the Group consists of bearings, seals, special steel and a comprehensive range of other high-tech industrial components. The experience gained in these various fields provides SKF with the essential knowledge and expertise required in order to provide the customers with the most advanced engineering products and efficient service.



SKF manufactures ball bearings, roller bearings and plain bearings. The smallest are just a few millimetres (a fraction of an inch) in diameter, the largest several metres. SKF also manufactures bearing and oil seals which prevent dirt from entering and lubricant from leaking out. SKF's subsidiaries CR and RFT S.p.A. are among the world's largest producers of seals.



The SKF Group is the first major bearing manufacturer to have been granted approval according to ISO 14001, the international standard for environmental management systems. The certificate is the most comprehensive of its kind and covers more than 60 SKF production units in 17 countries.



SKF has developed the Channel concept in factories all over the world. This drastically reduces the lead time from raw material to end product as well as work in progress and finished goods in stock. The concept enables faster and smoother information flow, eliminates bottlenecks and bypasses unnecessary steps in production. The Channel team members have the knowledge and commitment needed to share the responsibility for fulfilling objectives in areas such as quality, delivery time, production flow etc.

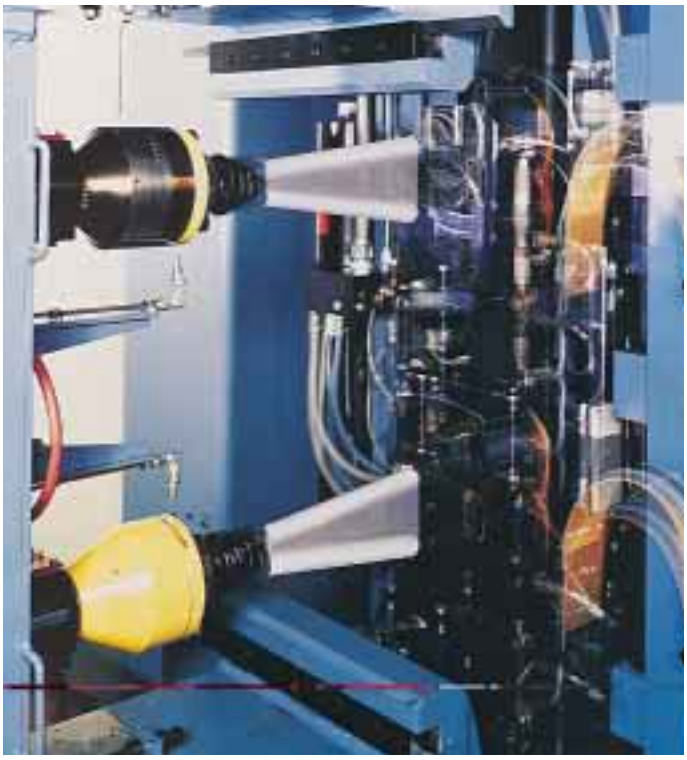

The SKF Engineering & Research Centre is situated just outside Utrecht in The Netherlands. In an area of 17 000 square metres (185 000 sq.ft) some 150 scientists, engineers and support staff are engaged in the further improvement of bearing performance. They are developing technologies aimed at achieving better materials, better designs, better lubricants and better seals – together leading to an even better understanding of the operation of a bearing in its application. This is also where the SKF Life Theory was evolved, enabling the design of bearings which are even more compact and offer even longer operational life.

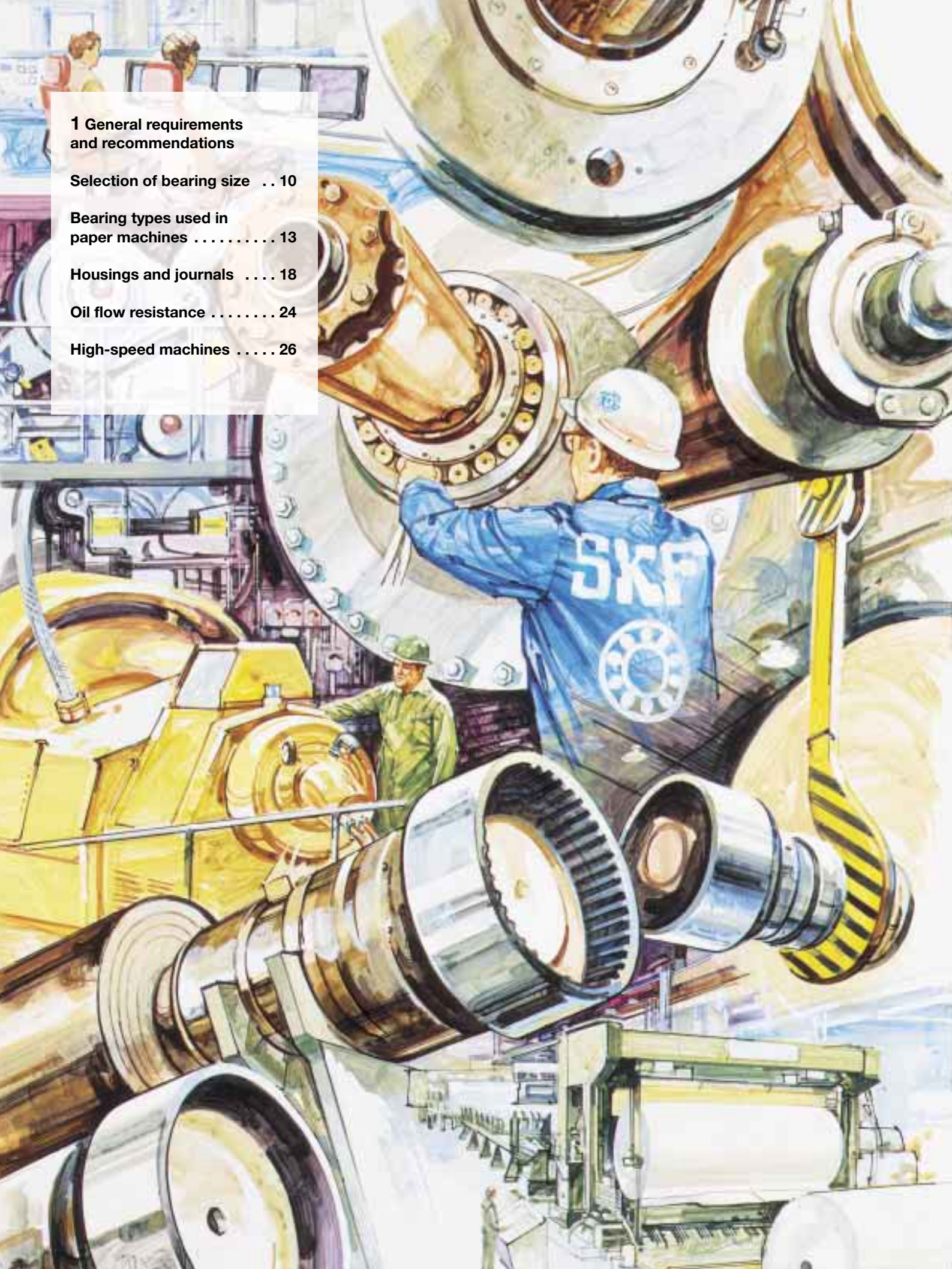

1 General requirements and recommendations

Selection of bearing size . . 10

Bearing types used in paper machines 13

Housings and journals 18

Oil flow resistance 24

High-speed machines 26

General requirements and recommendations

A modern paper machine can be more than 10 metres wide, 20 metres high and 200 metres long. Generally they consist of a forming or wire section, a press section, a drying section, a coating section, a calender and a reeler. Large machines incorporate as many as 1 500 bearings. Operating conditions for these bearings are vary greatly depending where they are installed.

A paper machine has a large number of rolls, all of which are equipped with medium and large-size rolling bearings (→ **fig 1**). In a few applications, plain bearings are sometimes used.

The operating speeds of the different types of modern paper machines are as follows:

Pulp drying machines	100–300 m/min
Board machines	400–800 m/min
Liner machines	500–1 300 m/min
Fine paper machines	900–1 800 m/min
Newsprint machines	1 000–2 000 m/min
Tissue machines	1 500–2 200 m/min

Fig 1

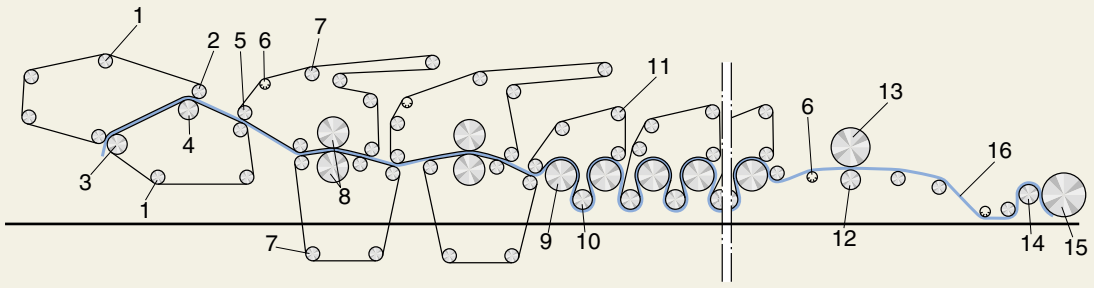

Basic layout of newsprint and fine paper machine

1. Wire roll
2. Forward drive roll
3. Forming roll (suction roll)
4. Suction couch roll
5. Pick-up roll
6. Spreader roll
7. Felt roll
8. Shoe press
9. Drying cylinder
10. Vacuum roll
11. Guide roll (wire roll)
12 Deflection compensating press roll (soft calender)
13. Thermo roll (soft calender)
14. Reel drum
15. Reel spool
16. Paper web

Paper machines differ in design according to the grade of paper that is to be produced. For example, when it comes to the number of drying cylinders, board machines have the most, followed by liner and newsprint machines. A great number of drying cylinders are needed in liner and board machines on account of the product thickness, and in newsprint machines because of the very high paper speed. Tissue papers require less drying and therefore the dryer section normally consists of only one large cylinder, called a Yankee cylinder. The web forming part also differs from machine to machine.

For modern newsprint paper machines the steam temperature is around 140 to 150 °C. For liner and board machines the maximum temperature is around 190 to 200 °C. Sometimes the machines operate with super-heated steam, and then temperatures up to 225 °C are common. Tissue machines normally have steam temperatures between 150 and 200 °C.

How these temperatures influence bearing temperatures is shown in the Lubrication examples (➔ **pages 105–179**).

Bearing life dispersion

Diagram 1

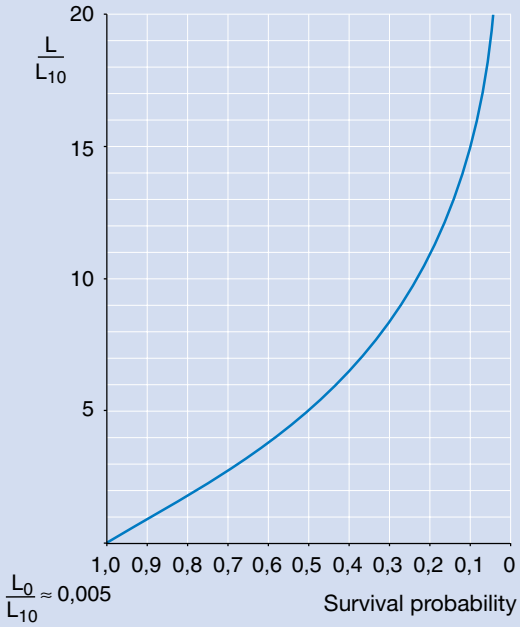

Selection of bearing size

Fatigue life – service life

By definition a bearing is considered to have failed by fatigue as soon as flaking (spalling) occurs. Flaking can be detected by using a vibration-sensitive instrument. If operation is continued after the first sign of flaking has been recorded, the flaked area will increase in size and the vibration level will rise.

SKF has gathered a lot of statistics from endurance life testing of rolling bearings. The results of these tests are shown in **diagram 1**. The diagram shows that the fatigue life of one bearing can differ a greatly from that of another bearing in a large configuration.

The length of time that a bearing can be left in service after reaching its defined fatigue life is generally difficult to specify. Under laboratory conditions, it has been possible to run bearings for 0,2 to 7 times their basic rating life, after flaking has been detected.

The replacement of failed bearings as soon as possible is always recommended, especially if they are in a critical position, mounted with excessive interference fit, subjected to heating through the journal etc. Apart from an increasing vibration level in the bearing, there is always a risk of cracking the inner ring.

To the end-user of SKF bearings, the term bearing life means the time that the bearings work satisfactorily in the machine. SKF calls this the service life of the bearings. The service life of paper machine bearings is especially interesting as these bearings are usually replaced for reasons other than fatigue.

L = Real bearing fatigue life
L_{10} = Basic rating life according to the ISO definition (the life that 90 % of all bearings attain or exceed)
L_0 = Minimum life exceeded by all bearings

Recommended L_{10h} and L_{10ah} lives

As the service life is often shorter than the fatigue life, it is necessary to select somewhat "oversized" bearings. In the papermaking industry, SKF has many years of experience selecting bearing size using the L_{10h} and L_{10ah} bearing life equations.

When calculating the life of paper machine bearings, SKF recommends that both the basic rating life L_{10h} and the adjusted rating life L_{10ah} are taken into consideration. The calculated bearing lives L_{10h} and L_{10ah} should exceed 200 000 hours for dryer section bearings and 120 000 hours for bearings in other sections. In this way, the influence of possible insufficient lubrication on the calculated bearing life is taken into consideration, which is of particularly importance for the dryer section bearings (➔ **pages 86–87**).

The Technical Association of the Pulp and Paper Industry in USA (TAPPI) requires the L_{10ah} life to be calculated. Calculations for drying cylinders, for example, shall include an a_{23} factor between 0,26 and 0,5. The calculated L_{10ah} life must be 100 000 hours or more for all bearing positions.

Calculation of bearing life

The most common way to calculate the bearing life is to use the equations in the General Catalogue. The equations to be used are

$$L_{10h} = \frac{1\ 000\ 000}{60n} \left(\frac{C}{P}\right)^p$$

and

$$L_{10ah} = a_{23}\ L_{10h}$$

where

L_{10h} = basic rating life, operating hours
n = rotational speed, r/min
C = basic dynamic load rating, N
P = equivalent dynamic bearing load, N
p = exponent of the life equation
p = 3 for ball bearings
p = 10/3 for roller bearings
L_{10ah} = adjusted rating life, operating hours
a_{23} = combined factor for material and lubrication



Modern paper machine

There are advantages and disadvantages with these conventional methods. One advantage is that they comply with ISO standards. These methods are also easy to use because of the limited amount of input data needed.

The main disadvantage is the limited scope for performing an accurate calculation where all influential factors are taken into account. Housings and journals, for example, are assumed to be stiff and perfectly round.

Therefore, SKF has developed advanced computer programs to enable in-depth analysis, including the influence of:

- internal design of the bearing
- clearance reduction due to heat generation in the bearing
- clearance reduction due to external heating
- clearance reduction due to housing or journal interference fit
- axial preloading
- errors of housing form
- bearing temperature due to heat generation in the bearing and external heating/cooling

This type of analysis is very useful for investigating bearing failures and also when designing housings etc.

The SKF Life Method calculating L_{10aah}

The SKF Life Method highlights the significant influence of cleanliness on the fatigue life of bearings. Even though bearings in pulp and paper machinery rarely run until they are fatigued, cleanliness has an important influence on service life.

The equation to be used is

$$L_{10aah} = a_{SKF}\, L_{10h}$$

Values of a_{SKF} for standard roller bearings are given as a function of η_c (P_u/P) in **diagram 2**, where

η_c = adjustment factor for contamination
P_u = fatigue load limit, N
P = equivalent dynamic bearing load, N

For SKF spherical roller bearings of Explorer quality, please refer to the SKF Interactive Engineering Catalogue, see also **page 15**.

More information is given in the SKF General Catalogue and the SKF Interactive Engineering Catalogue. The method can be used to evaluate the benefits of improving cleanliness and also to analyse the effects of higher lubricant viscosity.

SKF recommends the use of this method especially for downsizing and parametric studies. Contact SKF for more detailed information.

Factor a_{SKF} for radial roller bearings

Diagram 2

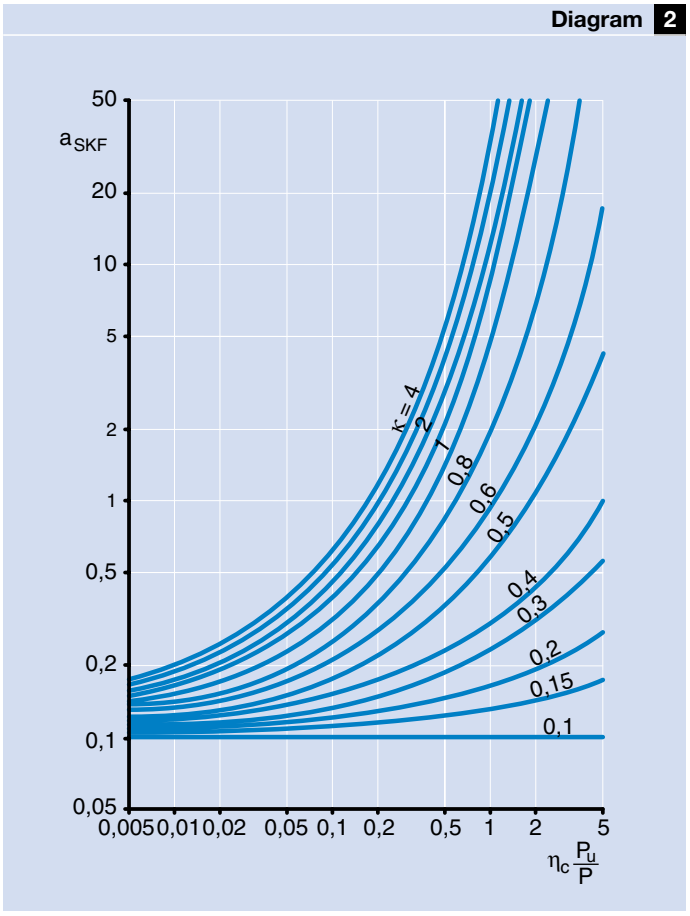

Bearing types used in paper machines

Present trends in the papermaking industry indicate continuing increases in output, necessitating larger machines working at higher speeds. Therefore, the bearings must be able to stand up to these increased loads and speeds, i.e. reach a long service life, while at the same time keeping servicing and maintenance requirements to a minimum.

A high proportion of the bearings used in papermaking machinery consist of spherical roller bearings of standard design. Their ability to accommodate considerable radial loads in combination with axial loads make these bearings very suitable for supporting the locating side (usually the drive side), of the various rolls and cylinders of paper machines. Spherical roller bearings also permit misalignment between shaft and housing, which is especially important for paper machines where bearings are mounted in separate housings spaced far apart.

In many cases, spherical roller bearings can also be used successfully at the non-locating side, (usually the front side), of paper machines. However, in most cases the ideal solution is to combine a spherical roller bearing at the drive side with a CARB® toroidal roller bearing at the front side (➔ **fig 2**). This bearing arrangement accommodates both misalignment and axial displacement internally and without frictional resistance, with no possibility of generating internal axial forces in the bearing system ($F_a = 0$ for both bearings).

If a CARB bearing is used it may be possible to downsize the bearing arrangements at both the drive and front sides. **Diagram 3, page 14,** shows the life of different bearing systems. The coefficient of friction μ for steel against cast iron is 0,15–0,20 for new housings of good quality. For used housings the coefficient can be considerably higher. In the example μ = 0,15 is used.

The standard solution – SKF spherical roller bearing on the drive side and a CARB bearing on the front side

Fig 2

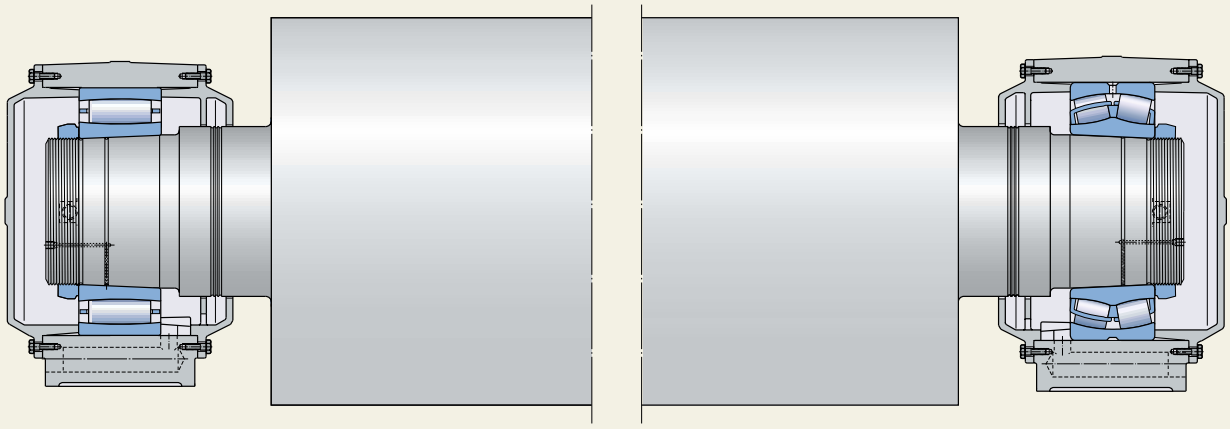

SKF spherical roller bearing of CC, C and EC designs

Fig 3

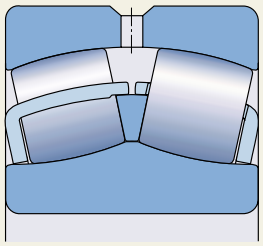

SKF spherical roller bearing of CAC, ECAC, CA and ECA designs

Fig 4

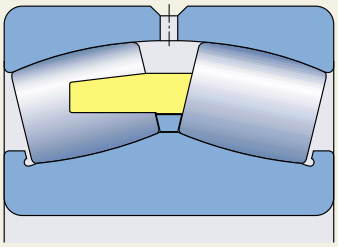

SKF spherical roller bearings of CC, C and EC designs

These bearings have symmetrical rollers, a flangeless inner ring and a pressed steel cage for each roller row (➔ **fig** 3). The guide ring is centred on the inner ring. EC design bearings incorporate reinforced roller sets for added load carrying capacity. The bearings of the CC design have been optimised to promote roller guidance which reduces friction.

SKF spherical roller bearings of CAC, ECAC, CA and ECA designs

These designs are used for the large sizes of SKF spherical roller bearings (➔ **fig** 4). The rollers are symmetrical and the inner ring has retaining flanges. The guide ring is centred on the inner ring between the two rows of rollers and the cage is a one-piece, double pronged machined steel or brass cage. The CAC and ECAC designs incorporate the CC design and the ECAC and ECA designs have reinforced roller sets for increased load carrying capacity.

Diagram 3

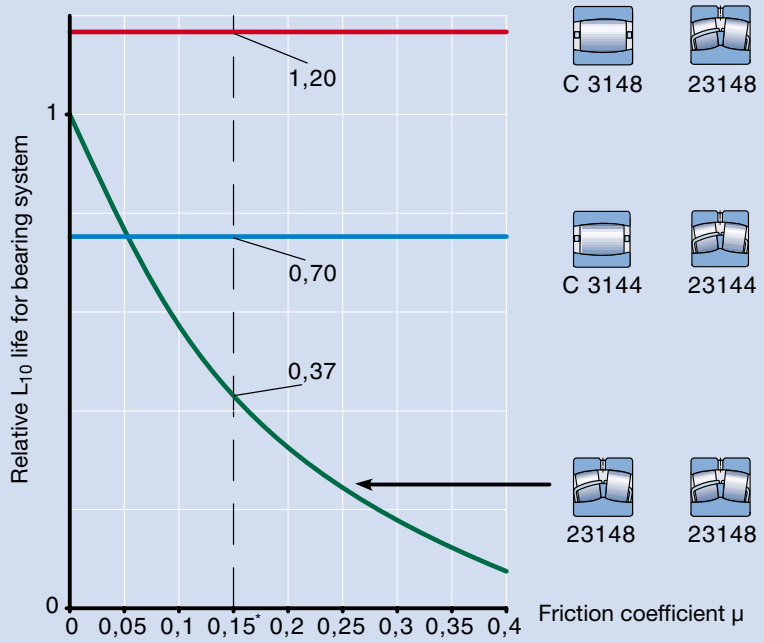

Relative life of different bearing systems

SKF spherical roller bearing of E design

Fig 5

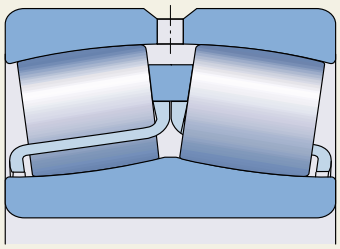

Fig 7

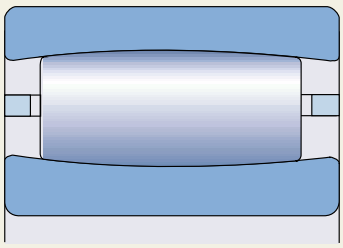

CARB toroidal roller bearing

SKF spherical roller bearings of E design

These bearings have symmetrical rollers, a flangeless inner ring, and a guide ring centred on the hardened cages (➔ **fig** 5). The E design bearings incorporate all the advantages of the well-proven SKF CC bearings as well as additional refinements such as higher load carrying capacity.

SKF Explorer

The new Explorer bearings are the latest generation from SKF.

Developments in steel production, new heat treatment procedures and a new manufacturing process are the factors behind the new bearing. The main advantages with the bearing are longer life for existing machines and the possibility for downsizing on new machines. To enable users to predict bearing life more accurately SKF has introduced increased basic dynamic load ratings and an additional factor to be considered when calculating L_{10aah} life using the SKF Life Method.

The Explorer bearings retain the designations of the earlier standard bearings e.g. 22218 E or 23152 CC/W33. However, each bearing and box is marked with the name Explorer (➔ **fig** 6).

More information about Explorer bearings and the present range can be obtained from your local SKF company.

CARB®

The best solution for most rolls and cylinders is to combine a spherical roller bearing on the drive side with a CARB toroidal roller bearing on the front side as CARB is the ideal non-locating bearing (➔ **fig** 7).

Fig 6



Explorer bearings

Like a spherical roller bearing, the CARB bearing can accommodate misalignment and heavy radial loads, but is also able to take axial displacement without frictional resistance, like a cylindrical roller bearing. This is what makes CARB bearing the ideal non-locating solution for most paper machine applications. The CARB bearing has the same friction as a spherical roller bearing and should therefore be lubricated in the same way. However, CARB bearings must always be lubricated from the side since it has no lubrication groove in the outer ring.

Designations

The most common supplementary designations for spherical roller bearings and CARB toroidal roller bearings are shown in **table** 1. The table also shows where in the machine the bearings are used.

Table 2 gives a larger number of supplementary designations that can be seen in a paper machine.

Doctor bearing

Specially designed multi-row radial ball bearings are used for doctors, allowing both the axial oscillation of the doctor as well as rotating movement (➔ **fig** 8). Specially designed plain bearings can also be used. The rotating movement is necessary when the doctor is turned to a rest position during maintenance or changing the blade. In addition to this degree of movement, the bearing is able to take shaft misalignment. This misalignment is accommodated either by a radius on the outer diameter which adjust the misalignment between housing and bearing or, for another bearing execution, in the sphere between the two mating parts of the bearing outer ring.

Fig 8 ***SKF doctor bearing***

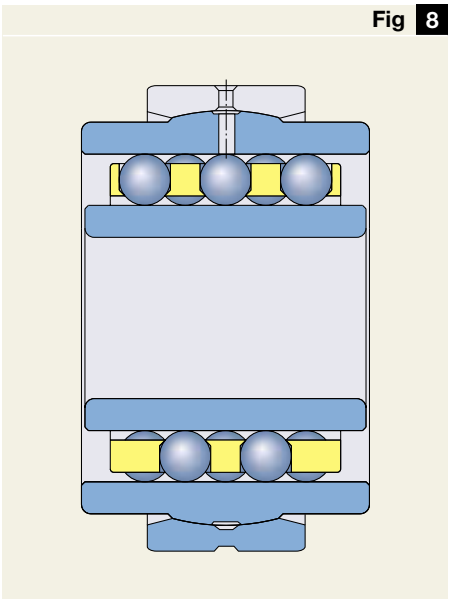

Common supplementary designations for SKF spherical roller bearings and CARB bearings

Table 1

Features Calenders	**Require-ment**	**Rolls** Forming section			Press section			Dryer section				
		Forming	Suction	Wire	Suction	Press	Felt	Dryers	Yankees	Felt	Thermo	Others
Clearance	std	X	X	X								
	C3		(X)		X	X	X			X		X
	C4							X	X		X	
Running accuracy	std			X			X	X		X		
	C08	X	X		X				X		X	X
	VQ424					X					X	X
Heat treatment	std	X	X	X	X	X	X			X		X
	HA3							X	X		X	
Special features	L5DA				(X)						(X)	(X)

Other bearing types

Other bearing types can also be seen in paper machines, e.g. cylindrical roller bearings in drying cylinder applications, taper roller bearings in felt roll applications, deep groove ball bearings and self-aligning ball bearings in spreader rolls, and plain bearings in calender applications.

Supplementary designations used for bearings in paper machines

Table 2

C	Spherical roller bearing with symmetrical rollers and floating central guide ring
CA	Spherical roller bearing of C design but with two integral inner ring flanges and machined cage
CC	Spherical roller bearing of C design but with improved roller guidance and reduced friction
CAC	Spherical roller bearing of CA design but with improved roller guidance and reduced friction
C2	Radial internal clearance less than Normal
C3	Radial internal clearance greater than Normal
C4	Radial internal clearance greater than C3
C5	Radial internal clearance greater than C4
C08	Extra reduced tolerance for running accuracy (P5) of inner ring and outer ring of assembled bearing
C083	C08 + C3
C084	C08 + C4
E	Standard spherical roller bearing with modified internal design, increased carrying capacity and W33 features
F	Machined cage of steel or special cast iron
HA1	Case-hardened inner and outer rings
HA3	Case-hardened inner ring
J	Pressed steel cage
K	Tapered bore, taper 1:12 on diameter
K30	Tapered bore, taper 1:30 on diameter
M	Machined brass cage
S1	Bearing rings dimensionally stabilised for operating temperatures up to +200 °C (standard for SKF spherical roller bearings and CARB bearings)
VA405	Specially heat treated pressed steel cages centred on the guide ring, outer ring centred guide ring and radial internal clearance C4
L5DA	No Wear™ (DLC coated rollers)
VQ424	Spherical roller bearing with running accuracy better than P5 (better than C08) and reduced width tolerance; additionally the bearing is according to W4 and W58 specifications and has a serial number
W4	Eccentricity high-point location marked on inner ring
W20	Three lubrication holes in outer ring
W26	Six lubrication holes in inner ring
W31	Bearing inspected to certain quality control requirements
W33	Lubrication groove and three holes in outer ring.
W58	Eccentricity high point location marked on outer ring
W77	Bearing with W33 holes plugged
W503	W33 + W4
W506	W31 + W33
W507	W4 + W31 + W33
W509	W26 + W31 + W33
W513	W26 + W33
W529	W33 + W58

Housings and journals

Due care must be given to the design of bearing housings and journals. For example, provision must be made for axial movement on the non-locating side. The space available for axial movement has to be greater than the thermal expansion of the roll.

The housings and journals should be strong enough to prevent excessive deformation under operating conditions. Additionally, the housings should fit properly into the frame of the paper machine and permit easy mounting, dismounting, and inspection of the bearings. In some positions the housings must also allow for the changing of wires and felts.

SKF has a range of special housings for felt rolls, drying cylinders and Yankee cylinders, where all important functional aspects have been taken into consideration.

Housings

Historically paper machines have been equipped with specially designed bearing housings. The manufacturer has designed a special housing for more or less every individual machine which is costly in terms of pattern equipment and design time. Specially made housings have also been very difficult to find when a replacement has been required at the paper mill.

SKF stepped into the lead position in the early 1990's by introducing a standard range of bearing housings for felt rolls in the dryer section, drying cylinders and Yankee cylinders. All housings are designed for high flow circulating oil lubrication, have maintenance-free sealing arrangements and are prepared with connections for condition monitoring.

Felt roll housings, dryer section
Felt roll housings are available in the following basic executions:

- Drive side: spherical roller bearing with located outer ring (→ **fig** 9)
- Front side: CARB bearing with located outer ring.
- Front side: spherical roller bearing with non-located outer ring

SKF recommends the use of a spherical roller bearing at the drive side and a CARB bearing at the front side.

Drying cylinder housings
Drying cylinder housings are available in the following basic executions:

SKF felt roll housing

Fig 9

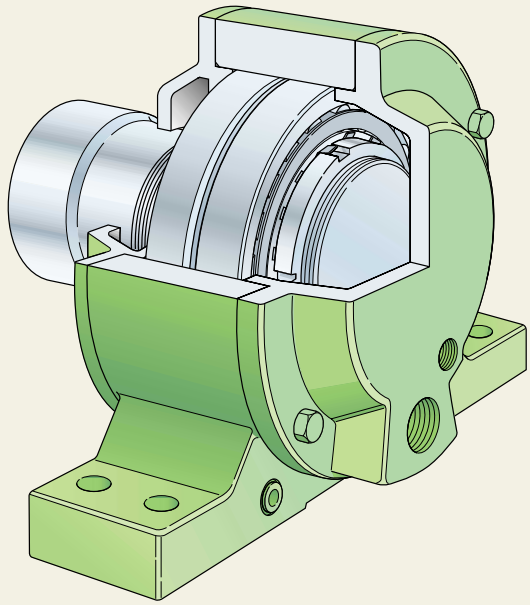

SKF drying cylinder housing

Fig 10

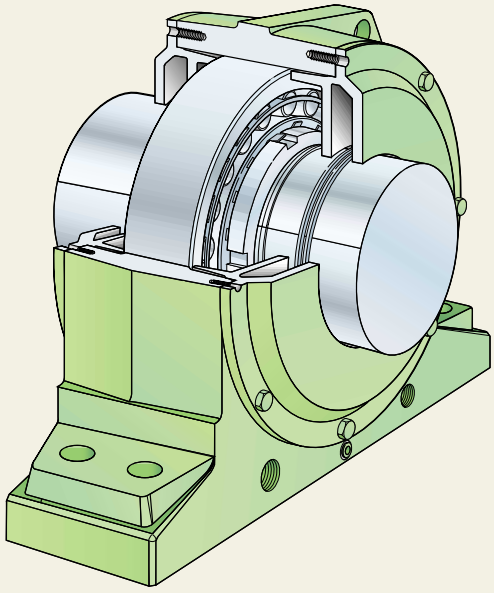

Diagram 4

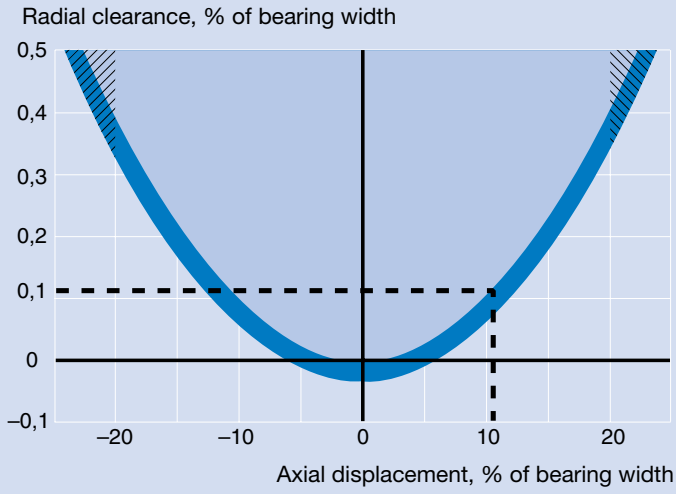

CARB bearings: Axial displacement depends on radial clearance. Rollers may protrude from the ring raceway at axial displacements above 20 % of the bearing width

- Drive side: spherical roller bearing with located outer ring
- Front side: CARB bearing with located outer ring (➔ **fig** 10).
- Front side: spherical roller bearing with non-located outer ring
- Front side: spherical roller bearing with located outer ring in housing on rockers

SKF recommends the use of a spherical roller bearing at the drive side and a CARB bearing at the front side.

SKF Yankee cylinder rocker housing

Fig 11

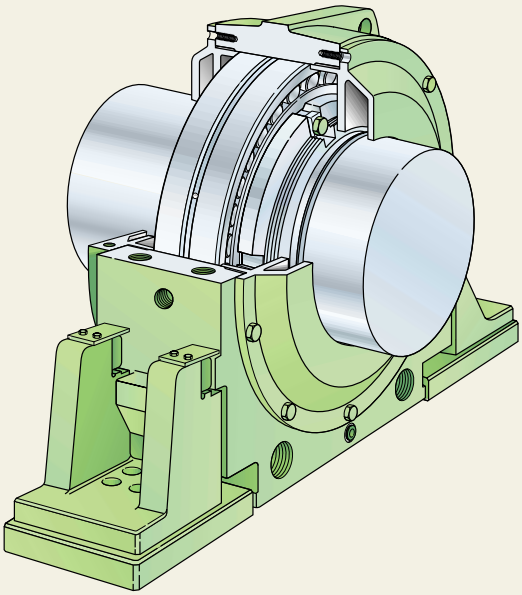

Yankee cylinder housing
Yankee cylinder housings are available in the following basic executions:

- Drive side: spherical roller bearing with located outer ring
- Front side: CARB bearing with located outer ring
- Front side: spherical roller bearing with non-located outer ring
- Front side: spherical roller bearing with located outer ring in housing on rockers
- Front side: spherical roller bearing with located outer ring in housing on rockers with two support rockers (➔ **fig** 11)

SKF recommends the use of a spherical roller bearing at the drive side and a CARB bearing at the front side.

Axial displacement for CARB bearings

The relation between radial clearance and axial displacement from a central position is shown in **diagram** 4. The bearing may be further displaced without life reduction, into the dark blue area. In this area friction increases by up to 50 %.

Axial displacement and radial clearance are given in relation to bearing width (B). This makes the diagram valid for all CARB bearings.

Example: Bearing C 3044/HA3C4 with bearing width B = 90 mm.

Assuming that the operational radial clearance during start-up is 0,1 mm. That is 0,11 % of the bearing width.

Diagram 4, **page 19**, then shows (dotted line) that the bearing can be axially displaced up to 11 % of bearing width, which is 0,11 × 90 = 9,9 mm from the centre.

During start-up, a typical operational radial clearance at moderate steam temperature and without journal insulation can be 0,1 % of the bearing width. This corresponds to a possible axial displacement from the centre of 10 % of the bearing width.

Housing seals

A very important factor for the reliable functioning of bearings in paper machines is efficient sealing of the bearing arrangements. It is important that sealing arrangements adequately protect the bearings from contamination and also prevent the lubricant from escaping and running down the machine. A rolling bearing contaminated by water and/or solid particles will become unserviceable long before its calculated life has been attained.

When designing seals, consideration must be given to the environment of each specific bearing arrangement. The bearing arrangements may be subjected to flowing water, condensation, dry conditions, or a high ambient temperature, depending on where in the machine they are positioned. The seals of the housings on the non-locating side must allow the required axial movement. The basic design of the seal depends upon whether the bearings are lubricated by grease or oil. The application drawings in this handbook show some examples of basic designs of bearing arrangements.

Different types of sealing arrangements are shown in the lubrication examples. The need for efficient seals is greatest in the wet section where most of the bearing arrangements are subjected to very wet conditions. Experience shows that a well-greased multi-stage labyrinth seal, whether it be axial or radial, affords good protection of the bearings in the wet section especially when it is reinforced by a splash guard (➔ **fig** 12). If the bearings are oil lubricated, the sealing arrangements have to be of different design. **Fig** 13 shows an efficient seal for oil lubricated press roll bearings. The seal must prevent water from entering the bearing housing, even during hosing down, which is often carried out with water at high pressure.

In the dryer section of the machine the bearing housings are exposed to moisture in the form of condensation or leaks from steam nozzles etc. Small soft fibres may enter the housings too. Nevertheless, simpler seals may be used for the housings in the dryer section. However, if problems occur more efficient seals have to be applied. **Fig** 14 shows a proposal of how to improve the seals of dryer section housings.

SKF can provide a full range of garter CR seals and V-rings.

Figs 12–14 Sealing arrangements

Fig 12

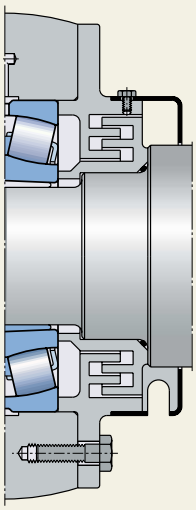

Fig 13

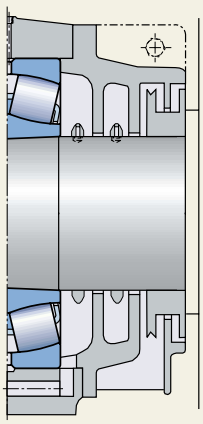

Fig 14

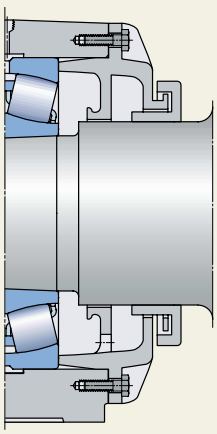

Dimensioning of outlets in bearing housings

Many bearing positions in modern paper machines are lubricated by circulating oil. For many years SKF has recommended larger oil flows than those normally used in older machines. One problem with older machines is draining increased circulating oil flow through small dimensions oil outlets. Old machines without a heating system in the oil tank have great difficulty starting after a lengthy standstill. The problem is high oil viscosity due to low oil temperature.

It is difficult to accurately calculate the required outlet diameter because many variables influence oil drainage, e.g. oil level difference, length and diameter of the pipe, number of bends, and oil viscosity. Generally the outlet diameters are selected from experience or by rule of thumb. **Fig** 15 shows a sketch of an outlet pipe with the relevant dimensions indicated.

An approximate calculation of the required minimum outlet diameter can be performed as follows

$$d = 2{,}2 \left(\frac{(2{,}5 + 0{,}2\, n)\, Q^2 \times 10^3 + 3\, \nu\, l\, Q)}{h} \right)^{1/4}$$

where
d = minimum bore of outlet pipe, mm
n = number of 90° bends
Q = oil flow, l/min
ν = kinematic viscosity of oil at lowest operating temperature (mostly at start-up), mm^2/s
l = pipe length, mm
h = oil level difference, mm

The equation is valid when the outlet from the housing has no restrictions. Practical experience shows that if there are restrictions close to the outlet, e.g. walls in bearing housings, the resistance to the inflow increases considerably. The calculated diameter d should then be increased by 50 %.

Example

A drying cylinder bearing housing has an outlet pipe with a length of 3 000 mm to the first connecting main pipe. The oil level difference to this connection is 1 000 mm and there are two bends. When starting up the machine the oil viscosity can be 220 mm^2/s if the temperature is around 40 °C. Select minimum bore diameter for the outlet pipe to avoid flooding when the circulating oil flow is 4 l/min.

$$d = 2{,}2 \left(\frac{(2{,}5 + 0{,}2 \times 2) \times 4^2 \times 10^3 + 3 \times 220 \times 3\,000 \times 4)}{1\,000} \right)^{1/4} = 20{,}8 \text{ mm}$$

With a restricted oil inflow the recommended minimum outlet pipe bore diameter is

d = 1,5 × 20,8 = 31,2 mm

Select a pipe with a bore diameter larger than 32 mm!

Oil outlet definition

Fig 15

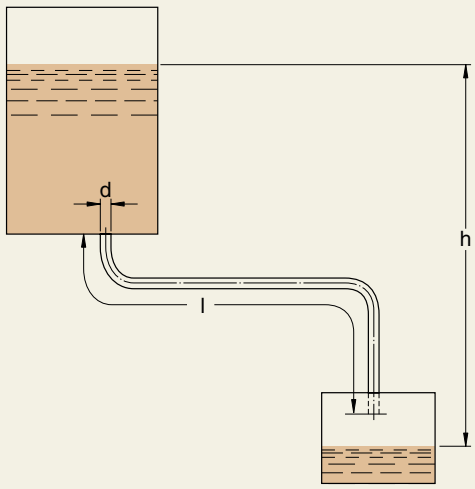

Tolerances

General

From a bearing function point of view, the main aspects of the housing and journal design in paper machines are the form and dimensional tolerances.

The accuracy of cylindrical bearing seatings on shafts and in housing bores should correspond to the accuracy of the bearings used. In the following, guideline-values for the dimensional, form and running accuracies are given and these should be adhered to when machining the seatings and abutments.

Dimensional tolerances

For bearings made to normal tolerances, the dimensional accuracy of the cylindrical seatings on the shaft should be at least to grade 6, and in the housing to at least grade 7. Where adapter or withdrawal sleeves are used on cylindrical shafts, grade 9 (h9) can be permitted.

Tolerances for cylindrical form

Since cylindricity is very difficult to measure, circularity and straightness instead are measured. The circularity and straightness tolerances as defined in ISO 1101-1983 should be one to two IT grades better than the prescribed dimensional tolerance, depending on requirements. For example, if a bearing seating on a shaft has been machined to tolerance m6, then the accuracy of circularity and straightness form should be to IT5/2 or IT4/2. Note that the tolerances shown here are only half of the tolerance grades. This is because the total tolerance grade is valid for the diameter and the definition is the radial deviation.

Two IT grades better than the prescribed dimensional tolerance is recommended when particularly stringent running accuracy requirements are stipulated, e.g. when bearings with extra close running accuracy tolerance C08 or VQ424 are used.

When bearings are to be mounted on adapter or withdrawal sleeves, the circularity and straightness of the sleeve seatings should be IT5/2.

Tolerances for abutments

Abutments for bearing rings should have a total axial runout tolerance as defined in ISO 1101-1983 which is better by at least one IT grade than the diameter tolerance of the associated cylindrical seating. The axial runout of the abutments corresponds to the required axial runout of the mounted inner ring. The latter runout requirement applies even when the bearing is mounted on a tapered journal without abutment.

Definition of tapered journal tolerances

Fig 16

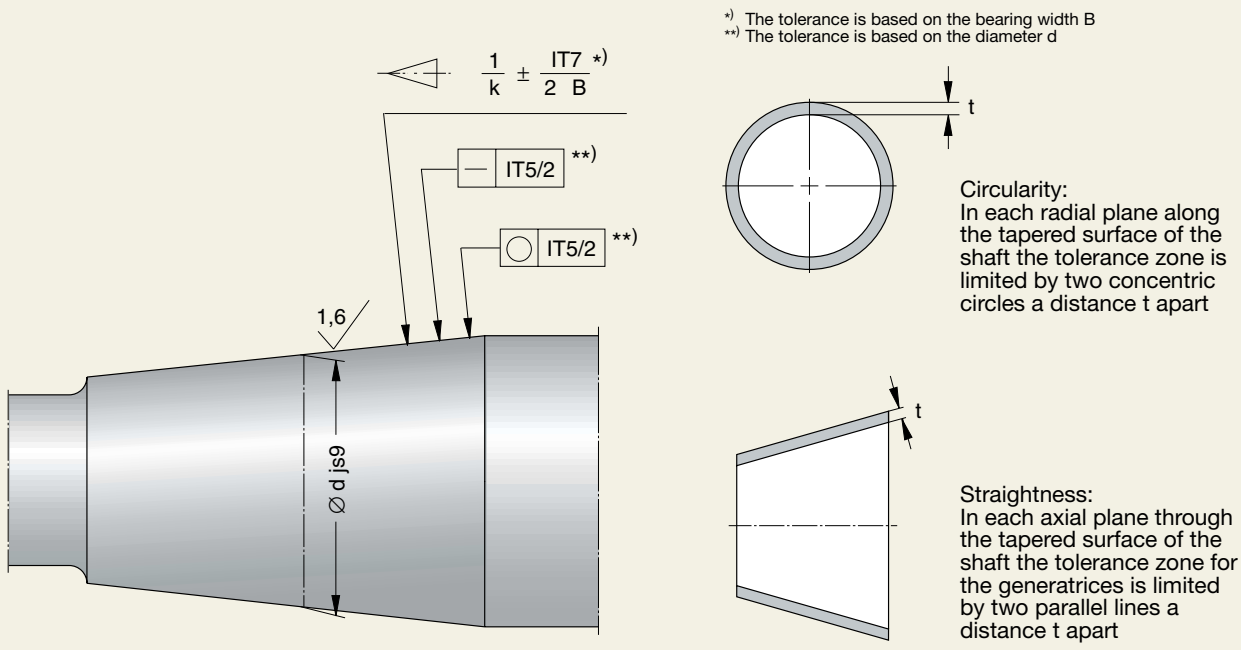

Tolerances for tapered journal seatings

When the bearing is mounted directly on a tapered journal seating, the seating diameter tolerance is permitted to be wider than in the case of cylindrical seatings. **Fig** 16 shows a grade 9 diameter tolerance, while the form tolerance stipulations are the same as for cylindrical journal seatings.

When establishing tolerances for tapered journal seatings for spherical roller bearings different systems have been applied in Europe and the USA.

The European system was based on the permissible angle deviation for the journal taper being on the plus side of the nominal value, i.e. following the practice applied to bearings. Moreover, the tolerance value was related to the nominal diameter of the journal.

In the USA the corresponding permissible deviation was located on the minus side instead and the value was coupled to the nominal width of the bearing.

These divergent methods have naturally led to practical difficulties. Consequently, a common SKF recommendation was agreed upon in 1986 and this recommendation conforms well with the ISO tolerance tables.

The main points of the uniform SKF recommendations for tapered journals for spherical roller bearings, also valid for CARB bearings, are as follows

- The permissible taper deviation for machining the taper seatings is a ± tolerance in accordance with IT7/2 based on the bearing width. The permissible deviation per mm is determined by dividing the IT7/2 value in mm by the bearing width (➔ **fig** 16). See also example on **page 24**.
- The straightness tolerance is IT5/2 and is defined in accordance with **fig** 16.
- The radial deviation from circularity, defined in accordance with **fig** 16, is to comply with IT5/2. When particularly stringent running accuracy requirements are stipulated, e.g. when spherical roller bearings with extra reduced running accuracy tolerance C08 or VQ424 are used, IT4/2 is to apply instead.

Gauging the taper deviation

The best way to check that the taper is within the recommended tolerances is to measure with dial gauges. A more practical method (but less accurate) is to use ring gauges or special taper gauges. Tapered seatings up to around 150 mm in diameter are generally checked with ring gauges, and those above this size with special taper gauges. When indelible ink is used the area in contact should be at least 90 %.

The gauge recommended by SKF in Europe can be seen in **fig** 17. The gauge can be supplied by Micronwerk GmbH in Aschaffenburg, Germany. The taper deviation and the diameter of the seating in relation to a reference surface can be measured with this gauge. The tolerance $M_1 - M$ is calculated by means of the equation

$$M_1 - M = \pm \left(\frac{IT7}{2} \times \frac{G}{B} \right)$$

where
G = distance between the points of measurement, mm
B = bearing width, mm

Gauge for tapered journal, European design

Fig 17

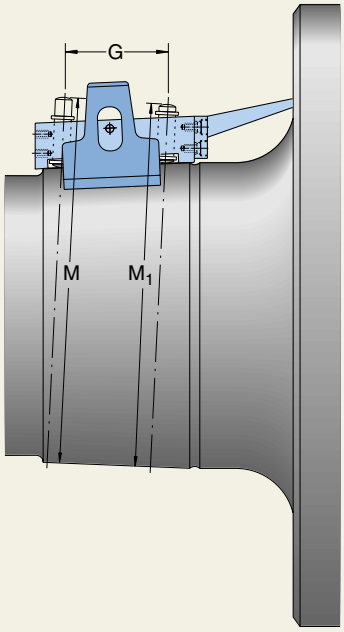

The gauge supplied by SKF in North America can be seen in **fig** 18. It is called the sine bar gauge and the taper deviation can be measured with this tool.

Example: Spherical roller bearing 23152 CCK/HA3C4W33 (bearing width 144 mm, IT7/2 for 144 mm is 0,020 mm). The taper is to be measured using our recommended gauge in **fig** 17, **page 23**. If a gauge with 80 mm distance between the measuring points (G) is used the taper deviation ($M_1 - M$) is allowed to be

$$\pm 0{,}020 \times \frac{80}{144} = \pm 0{,}011 \text{ mm}$$

Support surface for housing base
It is recommended that the support surface for the housing is finished to $R_a \leq 12{,}5$ µm. The flatness (planicity) tolerance should be to IT7 on the length of the support surface.

SKF gauge for tapered journal, American design

Fig 18

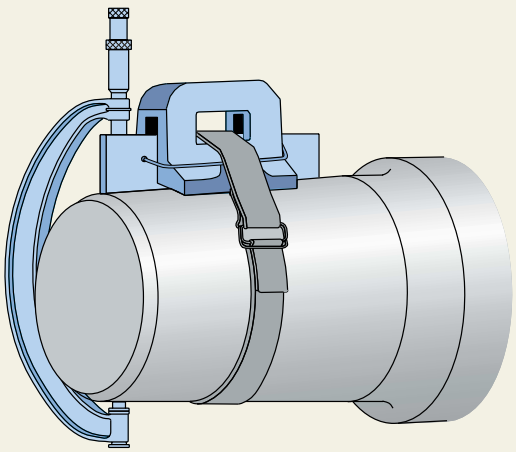

Oil flow resistance

Normally, oil flow resistance in a bearing is insignificant. Sometimes, however, the question arises as to what pressure is needed to force oil with a certain viscosity through the duct formed by the W33 lubrication groove and the housing into the interior of the bearing.

The oil pressure required to overcome the oil flow resistance of the duct can be calculated with the following equation

$$\Delta p = \frac{Q\ D\ \nu}{6\ 132\ d_h^4}$$

where
Δp = required oil pressure, MPa
Q = oil flow, l/min
D = bearing outside diameter, mm
ν = kinematic viscosity of oil at lowest operating temperature (mostly at start-up), mm^2/s
d_h = hydraulic diameter, mm

The hydraulic diameter d_h is a calculated value describing a virtual diameter which is equivalent to the groove cross section.

The calculation takes into consideration the resistance of the duct only. The length of the holes is very short, compared with the length of the duct, and therefore the resistance of the holes has been ignored.

The hydraulic diameter of the duct formed with different sizes of groove as well as the groove dimensions can be obtained from **table** 3. The groove numbers used for different spherical roller bearings are also listed in **table** 3.

When the required oil pressure is considered to be too high, and to ensure oil supply into the non-locating bearings, an extra groove can be turned in the bearing housing. The hydraulic diameter for the enlarged duct can be calculated from

$$d_h = \frac{4\ A}{O_a}$$

where
d_h = hydraulic diameter, mm
A = enlarged duct area, mm^2
O_a = circumference of enlarged duct area, mm

Example

What oil pressure is needed to pump an oil flow of 5 l/min through the duct formed by the W33 groove and the housing, into the bearing 23052 CCK/C4W33? The maximum kinematic viscosity of the oil is 220 mm^2/s.

The table shows that the groove number is 5, and thus $d_h = 5{,}18$ mm.

$$\Delta p = \frac{5 \times 400 \times 220}{6\,132 \times 5{,}18^4} = 0{,}1 \text{ MPa}$$

By turning a 25 mm wide and 6 mm deep groove in the housing seating the enlarged duct area will be (➔ **fig** 19)

$$A = 25 \times 6 + 3{,}6\,(16{,}7 - 2 \times 3{,}6) + 3{,}6^2 = 197{,}2 \text{ mm}^2$$

and the circumference

$$O_a = 25 + 2 \times 6 + 25 - 2 \times 3{,}6 + \frac{2 \times 3{,}6}{\cos 45} = 65 \text{ mm}$$

The hydraulic diameter thus becomes

$$d_h = \frac{4 \times 197{,}2}{65} = 12{,}14 \text{ mm}$$

and the required pump pressure

$$\Delta p = \frac{5 \times 400 \times 220}{6\,132 \times 12{,}14^4} = 0{,}0033 \text{ MPa}$$

The required pump pressure without a groove is 0,1 MPa. By turning a groove 25 × 6 mm in the housing seating a considerable reduction, to 0,0033 MPa, is obtained.

Fig 19 ***Example: dimensions of enlarged area***

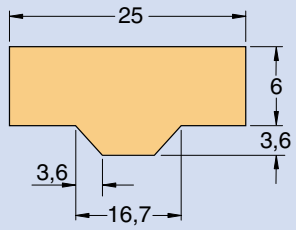

Groove sizes and dimensions and hydraulic diameter for spherical roller bearings

Table 3

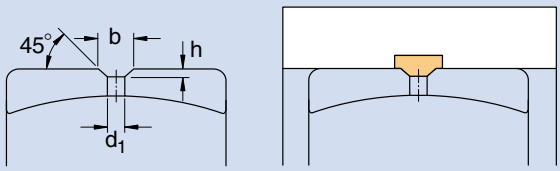

Groove No.	Groove dimension b	h	d_1	Hydraulic diameter d_h
–	mm			mm
1	5,5	1,2	3,0	1,72
2	8,3	1,8	4,6	2,59
3	11,1	2,4	6,0	3,45
4	13,9	3,0	7,5	4,32
5	16,7	3,6	9,0	5,18
6	22,3	4,8	12,0	6,92

Bearing size[1] Series 239 over	incl.	230 over	incl.	240 over	incl.	231 over	incl.	241 over	incl.	222 over	incl.	232 over	incl.	223 over	incl.	Groove No.
32	38	20	24	22	30	19	20	20	26	07	18	17	18	08	11	1
38	52	24	30	30	38	20	28	26	34	18	22	18	26	11	17	2
52	72	30	34	38	56	28	30	34	48	22	28	26	30	17	20	3
72	80	34	48	56	64	30	38	48	60	28	32	30	36	20	24	4
80	96	48	64	64	76	38	60	60	76	32	44	36	44	24	34	5
96		64		76		60		76		44		44		34		6

[1] The figures in the table represent the last two figures of the designation; thus, bearing 23024 has groove No.1

High speed machines

The operating speed of paper machines has increased significantly over the years and is expected to increase even more in the future.

Increased running accuracy

With production speeds higher than 900 m/min there is an increased demand for bearings with extra-reduced tolerances for running accuracy. The main reasons for these are to keep high paper quality and to avoid felt wear as well as paper tears. These aims can be achieved by using C08 or VQ424 bearings to obtain low vibration levels and a constant nip pressure. Press rolls, calender rolls and suction rolls are examples of high-speed applications where these high-precision bearings are often used.

C08 means that dimensional runout of the inner and outer rings correspond to ISO tolerance class P5.

VQ424 means that the bearing has a radial runout at least 20 % better than P5 (C08) and reduced width tolerance. Additionally the bearing is according to W4 and W58 specifications, carrying a serial number. VQ424 and C08 bearings are an advantage in all rolls that form a nip. VQ424 and C08 bearings are also an advantage when regrinding the rolls. By using such bearings less time is needed and higher accuracy is achieved.

As a rule of thumb, C08 or VQ424 bearings should be used if the speed is equal to or exceeds 80 % of the oil speed rating in the General Catalogue and the roll forms a nip with another roll.

Increased running accuracy of the bearing is not the only way to reduce vibrations in paper machines. Another way is to decrease the runout of the journal, see recommendations on **pages 22–24**.

Bearings mounted on adapter or withdrawal sleeves are therefore mainly seen in old machines.

The use of a spherical roller bearing as the locating bearing in combination with a CARB bearing as the non-locating bearing has often resulted in less vibration compared to the traditional solution using two spherical roller bearings.

NoWear™ bearings

One way to improve the performance of a bearing is to provide a beneficial contact condition in cases where sufficient lubrication is difficult to obtain. Surface engineering to obtain a low coefficient of friction is a means of achieving this. A commonly used method in industry is surface coating. For a coating to work effectively in a bearing it has to meet a set of requirements such as hardness, ductility and fatigue resistance, in order to stay on the surface during operation. The low friction ceramic coating in NoWear bearings from SKF is specially developed for rolling bearings.

NoWear bearings provide long term low friction and low wear properties by having a surface layer with a hardness of 1 200 HV. The coefficient of friction between coated rollers and steel is roughly one third of the friction between two steel components. NoWear bearings prevent wear and smearing in bearings which operate at heavy load as well as bearings which operate at radial loads less than the recommendations in the General Catalogue (0,02 C for spherical roller bearings and CARB bearings).

In fast machines with large and heavy bearings which may operate at radial loads less than the recommendations in the General Catalogue, SKF recommends NoWear bearings with coated rollers (L5DA). One example of such an application can be the upper thermo roll in soft calenders.

Speed rating – cooling

Sometimes the speed rating in the SKF General Catalogue is mistakenly taken to be the maximum operating speed for the bearing. This is not the case. By definition the speed rating is based on a certain temperature increase under specific operating conditions.

All bearings can be run at higher speeds if satisfactory lubrication is obtained by cooling with circulating oil. For example, suction and press roll bearings sometimes run at speeds twice the speed ratings in the General Catalogue.

However, when bearings are run at very high speeds additional aspects of internal radial bearing clearance and lubrication have to be considered, especially for large-size bearings. See press section recommendations on lubrication and bearing type, **pages 45–46**.

High speed machine





2 Forming section

Bearing arrangements 32

Forming section

The forming section is the first part of the paper machine. The stock (pulp) contains around 99 % water at this stage. By the end of the forming section the water content has to be about 80 % to make the paper web self-supporting as it moves on to the press section. Depending on the design of the forming section, modern paper machines can be grouped under the headings Fourdrinier machines or twin wire machines.

Fourdrinier machine

The Fourdrinier machine is the original, and still most widely used, formation unit. It can be used for virtually all types of paper and for machine speeds up to 900 m/min. **Fig** 1 shows the wire part of such a machine.

Some wire parts are equipped with a dandy roll to flatten the top surface of the sheet, giving it a smoother and closer finish, and to make watermarks in fine papers.

At the end of the wire part there is a suction couch roll that finally reduces the water content to 80 % to make the web self-supporting. The suction couch roll is equipped with a drive system and drives the whole wire part.

Fig 1

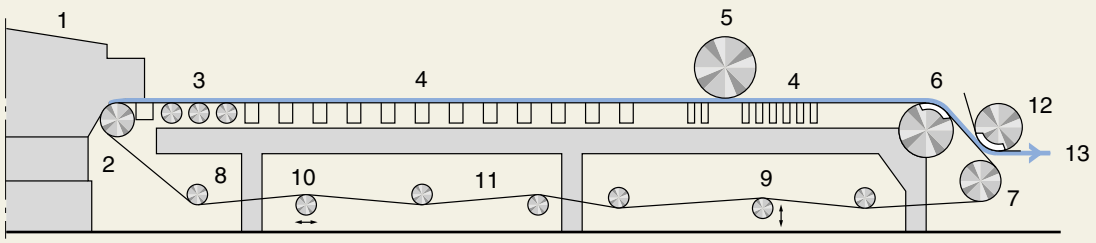

Wire part of Fourdrinier machine
1. Headbox
2. Breast roll
3. Table roll
4. Suction box
5. Dandy roll
6. Suction couch roll
7. Forward drive roll
8. Wire roll
9. Wire stretch roll
10. Wire guide roll
11. Wire
12. Suction pickup roll
13. Paper web

Fig 2

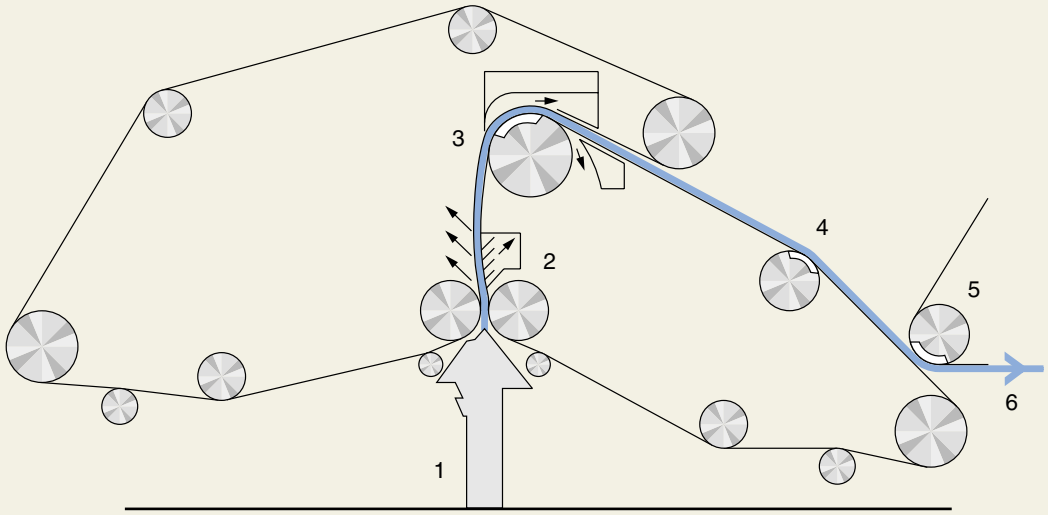

Blade former, Beloit Bel Baie III
1. Headbox
2. Forming shoe and blades
3. Primary suction roll
4. Secondary suction roll
5. Suction pickup roll
6. Paper web

Large machines and machines operating at high speeds are usually equipped with an additional drive roll, called the forward drive roll.

Twin wire machine

It is becoming increasingly common to dewater stock between two wires. This process was developed in the early 1970s to make dewatering and forming possible at high speeds.

It is possible to distinguish between three different types of twin wire machines: blade formers, roll formers and top wire formers.

Blade former
In a blade former the dewatering zone can be curved (➔ **fig** 2). The curved dewatering zone is followed by suction rolls.

Roll former
In a roll former, dewatering is effected between two wires which run round part of a relatively large forming roll. In most cases a suction roll is used as the forming roll (➔ **fig** 3).

In the case of tissue machines with web speeds up to 2 500 m/min the centrifugal force is utilised in the dewatering process. The forming roll is plain and dewatering occurs outwards only (➔ **fig** 4).

Fig 3

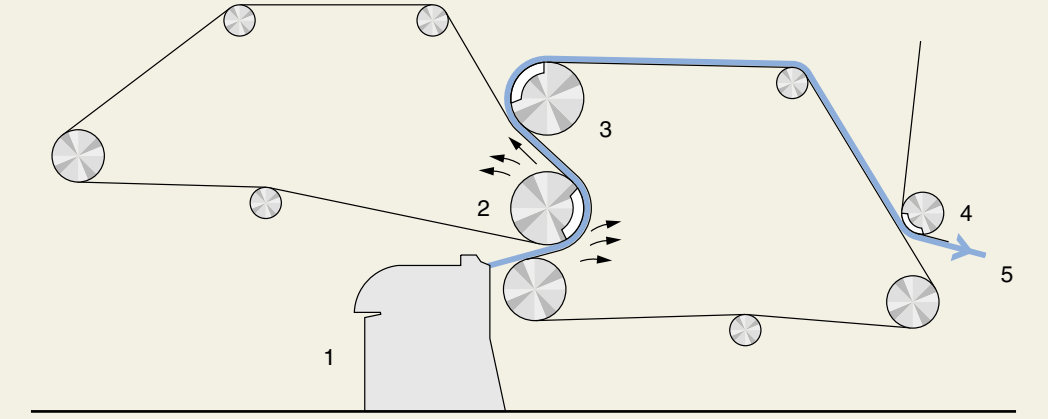

Roll former, Voith Paper Duo Former
1. Headbox
2. Forming (suction) roll
3. Suction couch roll
4. Suction pickup roll
5. Paper web

Fig 4

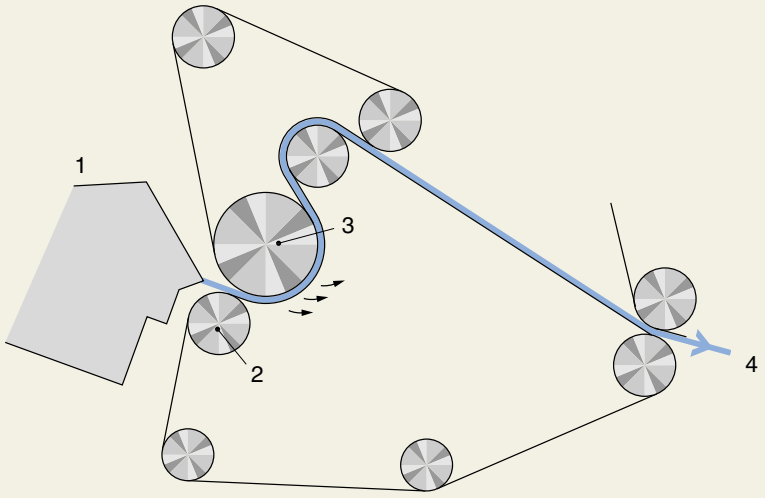

Roll former, Valmet Periformer
1. Headbox
2. Breast roll
3. Forming roll (plain)
4. Paper web

Top wire former
In a top wire former the dewatering and forming process starts on a Fourdrinier wire. Then the paper web passes through a nip between the Fourdrinier wire and a top wire where most of the dewatering in the wire part is carried out (➔ **fig** 5).

Existing Fourdrinier machines (➔ **fig** 1, **page 29**) can easily be upgraded by the addition of a top wire to increase capacity.

Fig 5

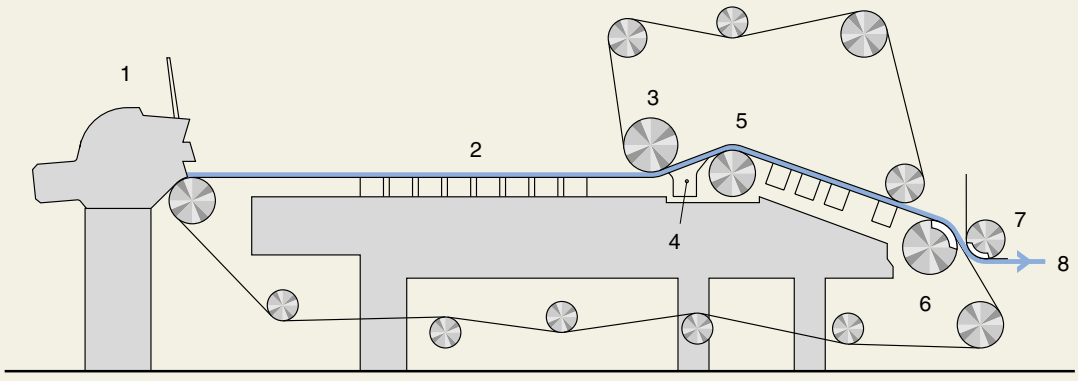

Top wire former, Valmet Sym former
1. Headbox
2. Suction box
3. Forming roll (grooved)
4. Forming shoe
5. Forming roll (plain)
6. Suction couch roll
7. Suction pickup roll
8. Paper web

Bearing arrangements

Breast and forward drive rolls

Different bearing arrangements may be used for breast and forward drive rolls. In **fig** 6 the bearing housing is of the plummer pillow block type. The housing has its end cover designed to provide support for the extended journal during lifting.

In **fig** 7 the bearing housing is sphered externally and stabilised by the use of an extra support bearing mounted on the end of the journal. The housing is carried in a sphered bracket connected to the frame. During wire changing, the roll is suspended by the bearing housing end covers, in line with the support bearing. A spherical or a cylindrical roller bearing may be used as the support bearing.

If needed space can be provided in one of the housings to allow for axial movement of the non-locating bearing.

These bearing arrangements work under very wet conditions. The housings should therefore incorporate efficient seals irrespective of whether grease or oil lubrication is employed. For CARB bearings the lubricant must be supplied from the side. For spherical roller bearings the lubricant can be supplied either from the side or via the groove and the holes in the outer ring. An annular groove turned in the housing so as to coincide with the holes improves the entry of lubricant. In designs incorporating a support bearing, a separate arrangement must be made for its lubrication.

Journal and housing tolerances for breast and drive rolls

Journal	Mounting on a sleeve		h9 (IT5/2)
	Mounting on a tapered journal, see “Tolerances”, **pages 22–24**		
	Support bearing seating		
	Cylindrical roller bearing	Spherical roller bearing	
	(65) to 140 mm	(65) to 100 mm	m6
	(140) to 200 mm	(100) to 140 mm	n6
		(140) to 200 mm	p6
Housing			G7

See also “Tolerances”, **pages 22–24**

Bearing types

Breast and forward drive rolls are carried by spherical roller bearings, series 232 and 223 and CARB bearings series C 32 and C 23, mounted on adapter or withdrawal sleeves or direct on tapered journals.

A spherical or a cylindrical roller bearing may be used as the support bearing.

The main bearings, as well as the support bearings, are usually selected with Normal radial internal clearance.

Selection of bearing size

Bearing selections should be based on life calculations according to the recommendations on **pages 11–12**. The recommended L_{10h} and L_{10ah} lives

Breast and forward drive roll bearing arrangement

Fig 6

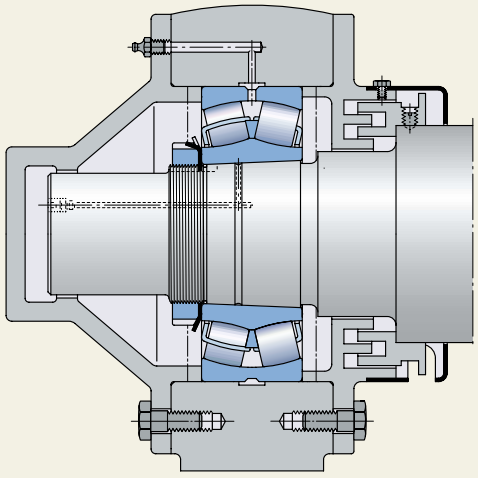

Breast and forward drive roll bearing arrangement

Fig 7

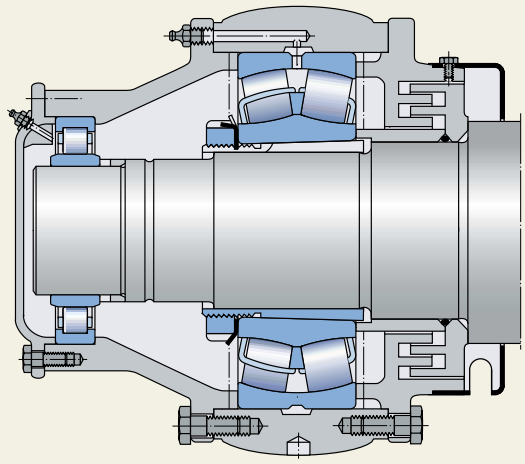

are 120 000 hours. The wire tension of 3–7 N/mm of roll length and the mass of the roll are to be taken into consideration when calculating the bearing loads.

When the housings are mounted on shake rails the axial accelerations must be taken into account.

Lubrication

The two most important factors for effective lubrication are the viscosity, achieving a satisfactory oil film, and the lubricant cleanliness with respect to water and solid particles. Protection against corrosion has top priority for these bearing positions. Therefore, the lubricant must have good rust-inhibiting properties.

Sometimes oil rather than grease lubrication is selected for these bearings. There are several reasons for this. One is the increased operating temperatures in high-speed machines requiring excessive grease quantities when relubricating. Another reason is that there are other oil-lubricated bearings nearby. When oil lubrication is selected the seals must be modified to suit oil lubrication. An example of such a seal-arrangement is shown in (➔ **fig** 8).

For spherical roller bearings as well as for CARB bearings SKF recommends oil lubrication when the speed is 50 % or higher than the grease speed rating in the General Catalogue.

For further information see the "Lubrication" chapter, **pages 83–103** and the Lubrication examples 1 and 2, **pages 106–109**.

Wire rolls

Wire roll bearings in existing machines with moderate speeds are mainly grease lubricated and mounted on sleeves but, with increasing paper speeds, the use of oil lubrication and of bearings mounted direct on the journal is preferred.

Fig 8 shows an oil lubricated bearing arrangement for the wire rolls. The housing is of the plummer pillow block type. The CARB bearing is mounted directly on the shaft, but mounting on a withdrawal sleeve is also used. The bearing arrangement is similar to that for press rolls.

Fig 9 shows a bearing arrangement, with two bearings in the same housing, for guide and stretch rolls. The housing is sphered externally. The bearing arrangement is designed so that one of the bearings takes up the main load. The function of the support bearing is to keep the housing and journal axes in line during wire tension adjustment and wire guidance.

The design of the bearing arrangement for guide and stretch rolls depends on the design of the associated components. The support bearing may be a spherical or a cylindrical roller bearing and must be mounted at a certain distance from the load carrying bearing. The arrangement shown in **fig** 9 uses a spherical roller bearing as the support bearing. Note that the support bearings in both housings must be able to accommodate axial displacement.

Wire and felt roll bearing arrangement

Fig 8

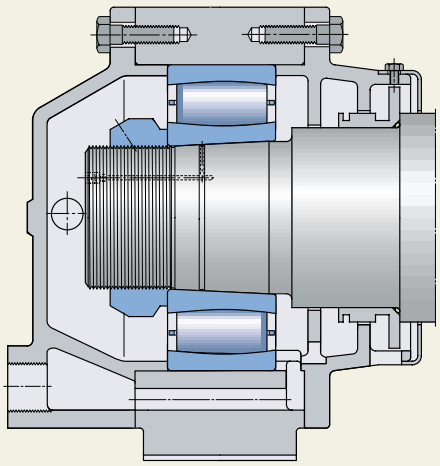

Guide and stretch roll bearing arrangement

Fig 9

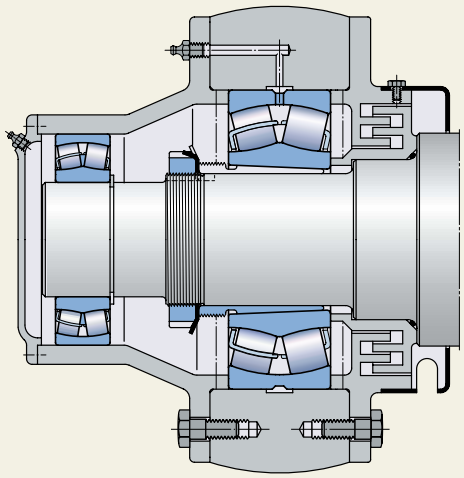

If needed, space can be provided in one of the housings to allow for axial movement of the non-locating bearing.

Fig 10 shows a grease lubricated CARB bearing arrangement for wire rolls with improved protection against water and particle entrance. The housing is provided with a protective cover.

For CARB bearings the grease must be supplied from the side. For spherical roller bearings the grease can either be supplied from the side or via the groove and the holes in the outer ring. In designs incorporating a support bearing, separate arrangements must be made for its lubrication.

Bearing types

SKF recommends the use of spherical roller bearings of series 223 and 232 and CARB bearings of series C 23 and C 32, but spherical roller bearings of series 222 and CARB bearings of series C22 can also be used.

Both spherical roller bearings of series 222 and cylindrical roller bearings of series NUB 2, with wide inner ring, can be used as the support bearing.

The main bearings, as well as the support bearings, are usually selected with Normal radial internal clearance.

Selection of bearing size

Bearing selection should be based on life calculation according to the recommendations on **pages 11–12**. The recommended L_{10h} and L_{10ah} lives are 120 000 hours. If the mass of the wire roll is known, the radial bearing load can be roughly estimated with the aid of the following equations

$G = g\ m$

$K_r = 2\ q_1\ L + G$

$F_r = 0{,}5\ K_r$

$F_a = \mu\ F_r$ (for a spherical roller bearing as non-locating bearing)

$F_a = 0$ (for a CARB bearing as non-locating bearing)

where
G = roll weight, N
g = 9,81 (acceleration of gravity), m/s^2
m = roll mass, kg
K_r = roll load, N
q_1 = wire tension, N/mm
L = wire width, mm
F_r = radial bearing load, N
F_a = axial bearing load, N
μ = coefficient of friction between housing and outer ring (use $\mu = 0{,}15$ in the calculation)

Generally it can be assumed that the wire tension is 3–7 N/mm over the length of the roll. The axial bearing load caused by wire guidance can be ignored in the case of wire rolls.

Journal and housing tolerances for wire rolls

Journal	Mounting on a sleeve		h9 (IT5/2)
	Direct mounting on a cylindrical journal		
	(65) to 100 mm		m6
	(100) to 140 mm		n6
	Mounting on a tapered journal, see “Tolerances”, **pages 22–24**		
	Support bearing seating		
	Cylindrical roller bearing	Spherical roller bearing	
	(40) to 100 mm	(40) to 65 mm	m5
		(65) to 100 mm	m6
Housing	For the wet section		G7

See also “Tolerances”, **pages 22–24**

Wire roll bearing arrangement with grease lubrication and protective cover

Fig 10

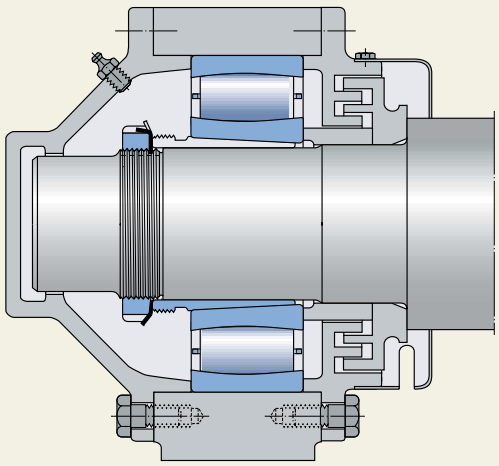

Lubrication

The two most important factors for effective lubrication are the viscosity, achieving a satisfactory oil film, and the lubricant cleanliness with respect to water and solid particles. Protection against corrosion has top priority for this bearing position. Therefore, the lubricant must have good rust-inhibiting properties.

Sometimes oil lubrication rather than grease lubrication is selected for these bearings. There are several reasons for this. One is the increased operating temperatures in high-speed machines requiring excessive grease quantities when relubricating. Another reason is that there are other oil lubricated bearings nearby.

For spherical roller bearings as well as CARB bearings SKF recommends oil lubrication when the speed is 50 % or higher than the grease speed rating in the SKF General Catalogue.

For further information see the "Lubrication" chapter, **pages 83–103** and the Lubrication examples 3 and 4, **pages 110–113**.

Suction rolls

Fig 11 shows a grease lubricated bearing arrangement of older design in which the front-side bearing is mounted in the end of the roll and the drive-side bearing is mounted on a withdrawal sleeve. Note that the stationary inner ring of the front side bearing is mounted as a non-locating ring with a clearance fit on the sleeve to allow axial freedom of movement. Grease is supplied through holes in the inner ring. SKF bearings of this design have the suffix W513 in their designation, e.g. 23060 CC/W513.

One disadvantage with the bearing being mounted in the end of the roll is that it is difficult to make the internal seal so efficient that the ingress of water is eliminated.

Suction rolls of this design are not so common today, but can be found in older low speed machines.

The design shown in **fig** 12, **page 36**, is an improved version of the design in **fig** 11. This version has oil lubrication of the main bearings and grease lubrication of the internal bearing. In modern machines also the internal bearing is oil lubricated. With this design both main bearings are mounted direct on the roll journals and are readily accessible for inspection. When bearings are mounted direct on the

Fig 11

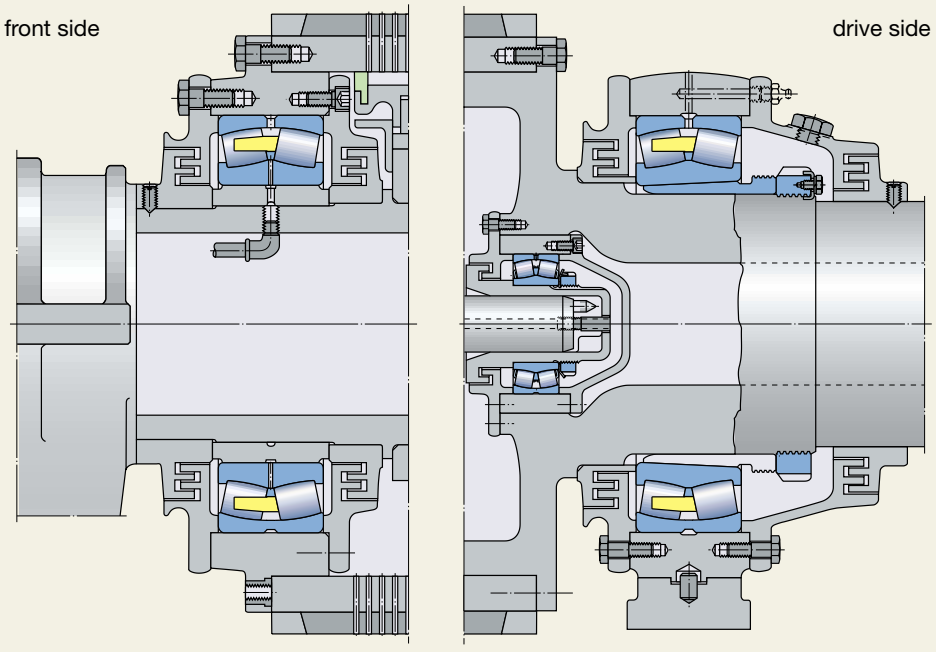

Suction roll bearing arrangements, grease lubricated

journal, oil injection grooves should be provided in the journal so that the bearings can be easily dismounted when the rolls are being serviced. In this design, space is provided in the housing to allow axial movement of the non-locating bearing.

The suction box support bearing is often mounted on a cylindrical sleeve and in a housing which is bolted to the back wall of the suction roll.

A development of the design according to **fig** 12 is to replace the solid shaft by one with a bore which makes it possible to drain the water at both sides (➔ **fig** 13). With this design, the drive shaft is provided with a shaft-mounted gear.

With high-speed paper machines, the frictional heat in the large bearings on the suction rolls is so great that large flows of circulating oil must be passed through the bearings to dissipate the heat. Therefore, it is important that large drainage ducts are incorporated in the design to cope with these large flows of oil.

Bearing types

Spherical roller bearings of series 230 and 231 are commonly used for suction rolls and bearings of series 239 are often used for very large diameter journals. Bearings for suction rolls should have C3 radial internal clearance and improved running accuracy (VQ424 or C08).

If the suction roll is provided with an internal support bearing, a bearing of series 232, 223 and 241 should be selected. Normal or C3 radial internal clearance is used.

Journal and housing tolerances for suction rolls

Journal	Mounting on a sleeve	h9 (IT5/2)
	Front side bearing as shown in **fig** 11, **page 35**	f6
	Suction box support bearing	h6
	Mounting on a tapered journal, see “Tolerances”, **pages 22–24**	
Housing	Stationary outer ring	G7
	Rotating outer ring	N7
	Rotating outer ring for suction rolls with wide opening at the shell for the vacuum zone	P7
	Suction box support bearing	N7

See also “Tolerances”, **pages 22–24**

Fig 12

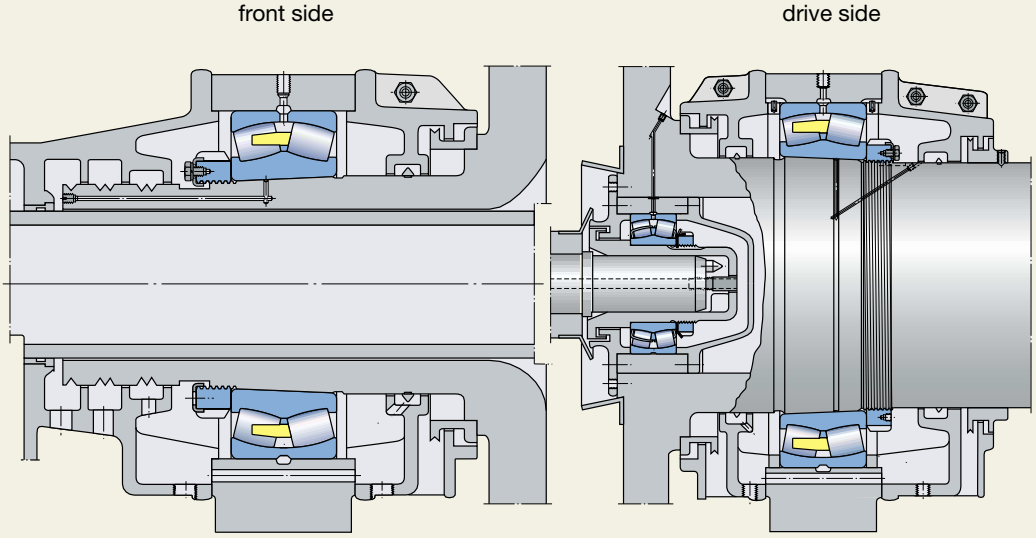

Suction roll bearing arrangements, oil lubricated

Selection of bearing size
Bearing selection should be based on life calculation according to the recommendations on **pages 11–12**. The recommended L_{10} and L_{10ah} lives are 120 000 hours. The loads from the following sources have to be considered:

- roll mass
- wire tension
- all press nips
- vacuum

Lubrication
The two most important factors for effective lubrication are the viscosity, achieving a satisfactory oil film, and the lubricant cleanliness with respect to water and solid particles. Protection against corrosion has top priority for this bearing position. Therefore, the lubricant must have good rust-inhibiting properties.

Oil lubrication is often selected for these bearings, especially in new machines. There are several reasons for this. One is the increased operating temperatures in high-speed machines requiring excessive grease quantities when relubricating.

The relative speeds of suction roll bearings are the highest of all bearings in paper machines. When large bearings rotate at high speeds there is a risk of smearing i.e. sliding of unloaded rollers when they enter the loaded zone. This risk is even higher for press roll bearings because of their heavier rollers. Therefore the lubricant requirements will be dictated by the press roll bearings.

For further information see the "Lubrication" chapter, **pages 83–103** and the Lubrication examples 5 and 6, **pages 114–117**.

Fig 13

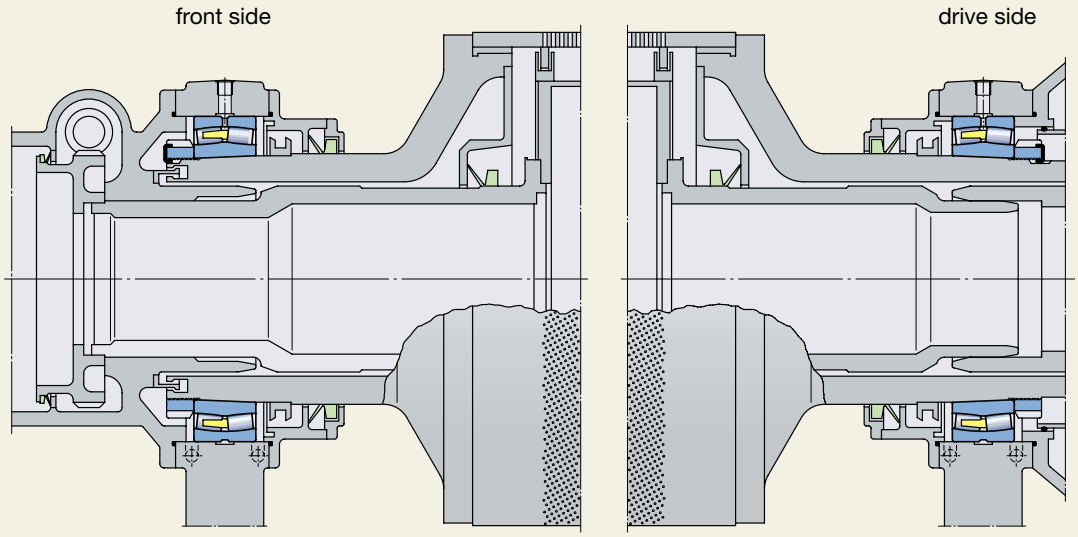

Suction roll bearing arrangements without internal bearing, oil lubricated

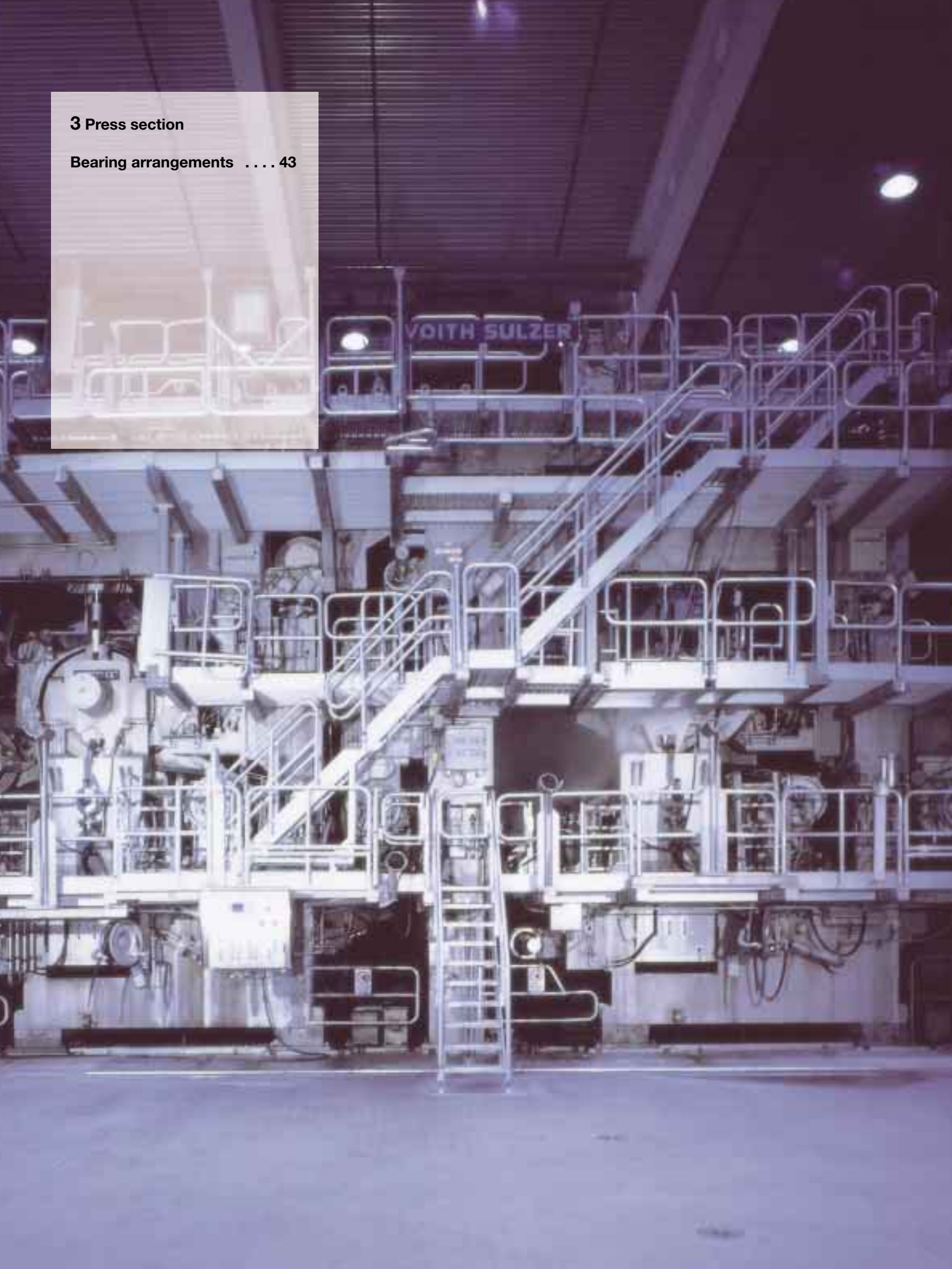

3 Press section

Bearing arrangements 43

Press section

On leaving the forming section the paper web has water content of around 80 %. When the web leaves the press section the water content may vary between 50 and 65 %.

The paper web is fed through the press section on one felt or between two felts. The web passes through a number of press nips which squeeze the water out of the paper into the felt which conveys the water away.

Pressing the water out of the paper web is a less expensive process than drying by using steam heating. As a general rule, it may be said that for every one per cent of water that is removed in the press section four per cent of the steam utilised in the dryer section will be saved. The pressing process is accordingly being developed intensively.

The linear load, expressed in N/mm, is a benchmark for the pressing action. In ordinary presses the linear load is between 70 and 150 N/mm but in so-called shoe presses (wide-nip presses) it can be as much as 1 200 N/mm. The main advantage with a wide press nip is that there is more time for the water to be pressed out.

High-temperature pressing, also called impulse drying, is becoming more widespread. This technology gives a higher dryness level than an ordinary plain press and can also improve sheet properties.

Presses can be basically classified as single-nip and multi-nip presses. The single-nip presses can be sub-divided into plain, suction and shoe presses.

Plain presses

The plain press (➔ **fig** 1) with two plain rolls and one felt was the original press in paper machines. Plain presses were not particularly effective and were superseded by other types of presses as knowledge of the pressing process increased.

Plain press, old design
1. Paper web
2. Granite roll or steel roll with special cover
3. Felt
4. Pneumatic piston
5. Rubber-covered bottom roll

Fig 1

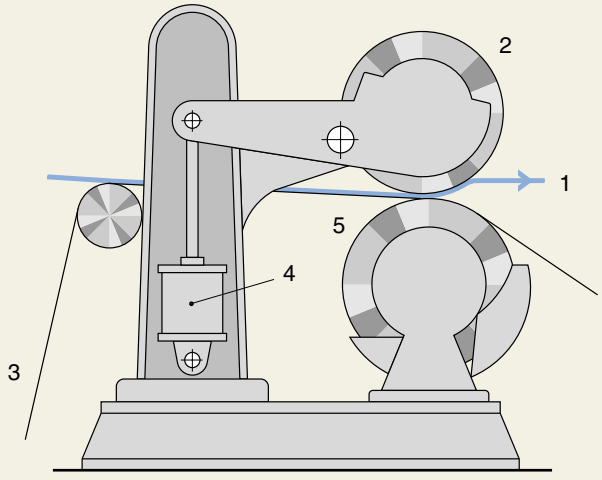

Fig 2

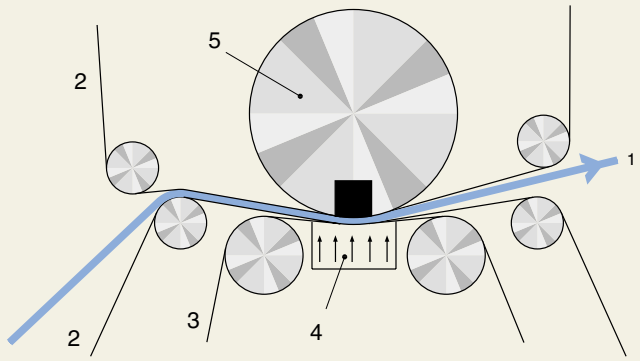

Beloit ENP
1. Paper web
2. Felt
3. Plastic blanket
4. Concave shoe
5. CC roll

In recent times, plain presses have made a comeback in the form of large-diameter press rolls, see the section about shoe presses.

Suction presses

In a suction press, just like in a plain press, pressing occurs between two rolls. The difference is that in the suction press one of the rolls, usually the bottom one, is a suction press roll. The other roll is a so-called solid press roll made of steel and covered with hard rubber. In older machines granite rolls can also be seen. The water is pressed and sucked out of the web, via the felt, into the suction press roll.

Shoe presses

Shoe presses (wide-nip presses) were primarily of interest when it came to manufacturing linerboard and fluted paper. Today shoe presses are used in all types of machines. There are many different kinds of wide-nip presses on the market such as Beloit's ENP, Valmet's Sym-Belt presses and Voith's Paper NipcoFlex presses.

The basic design of Beloit ENP (Extended Nip Press) is outlined in **fig** 2. The wide press nip is achieved by a concave shoe being pressed from below against a roll. The paper web is conveyed through the nip between two felts. The problem of friction in the contact with the fixed shoe has been solved by placing an endless plastic blanket between the shoe and the bottom felt and coating the blanket with oil prior to the nip so that a supporting oil film is formed between the blanket and the shoe in the nip. The top roll is a CC (Crown Control) roll covered with a hard plastic material. In the ENP the nip width is 254 mm and the linear load can reach 1 050 N/mm.

The Voith Paper NipcoFlex press operates in basically the same way as the ENP. **Fig** 3 shows the Voith Paper NipcoFlex press. The rolls are up to 1 500 mm in diameter, and a NIPCO-P roll with crown control is used as the top roll. The linear load can reach more than 1 200 N/mm and the nip width is 300 mm.

A wide nip can also be achieved by using large diameter press rolls.

Fig 3

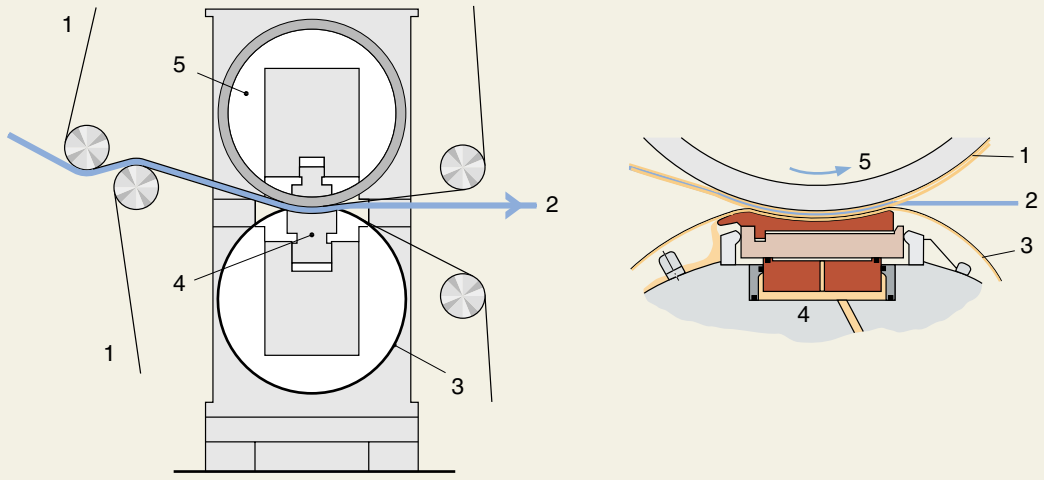

Voith Paper NipcoFlex press
1. Felt
2. Paper web
3. Flexible plastic shell
4. Hydrostatic shoe
5. NIPCO roll

Fig 4

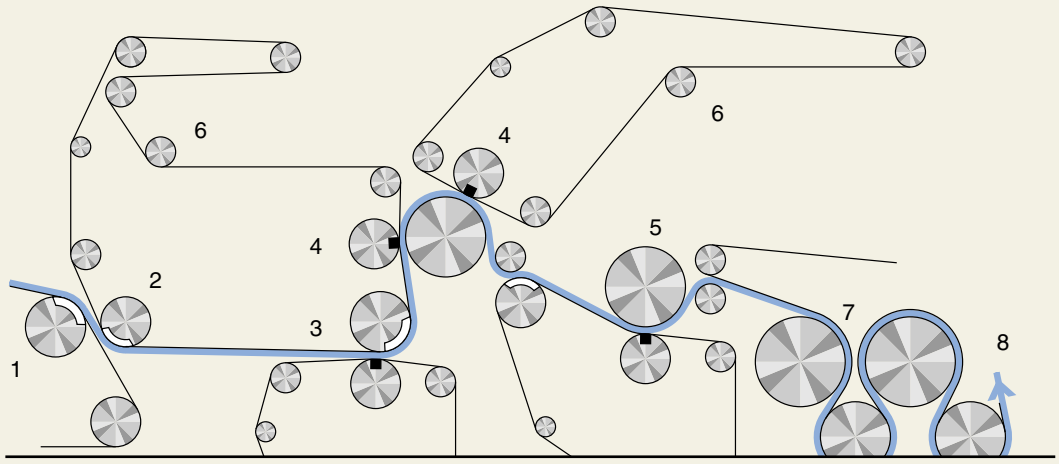

Valmet Sym-Press press section with multi-nip
1. *Suction couch roll*
2. *Suction pickup roll*
3. *First nip with a suction roll and Sym roll below*
4. *Second and third nips with two Sym rolls against a central roll*
5. *Fourth nip with a granite roll or steel roll with special cover and Sym roll below*
6. *Felt roll*
7. *Drying cylinder*
8. *Paper web*

Multi-nip presses

Multi-nip presses are now a common feature of all types of paper machines. The multi-nip press is normally made up of two or more press rolls acting against a central roll. **Fig** 4 shows the Valmet Sym-Press with multi-nip. In most cases the central roll is a steel roll with a special cover, but in older machines granite rolls are sometimes used. There are also presses where a suction roll is used. The press rolls, around the central roll, can be plain rolls, suction rolls or deflection-compensating rolls.

Deflection-controlled press rolls

As uniform nip pressure is required to obtain an even paper quality, the ordinary plain press rolls are crowned, i.e. made with a larger diameter in the middle. Deflection-compensating press rolls are also crowned but in a different way (➔ **fig** 5).

The solid press rolls are crowned by grinding to give a uniform linear load over the whole length of the roll. This can only be achieved at a certain roll load. The deflection-controlled roll, on the other hand, is hydraulically crowned and, as a result, a uniform linear load can be achieved irrespective of the roll load.

A deflection-controlled roll is made up of a stationary, fixed through shaft and a shell that rotates about the shaft (➔ **fig** 5). Pressurised oil between shaft and shell ensures that the latter

Deflection-controlled press roll
1. *Top roll*
2. *Paper web*
3. *"Flexible" steel shell*
4. *Pressure chamber*
5. *Stationary shaft*

Fig 5

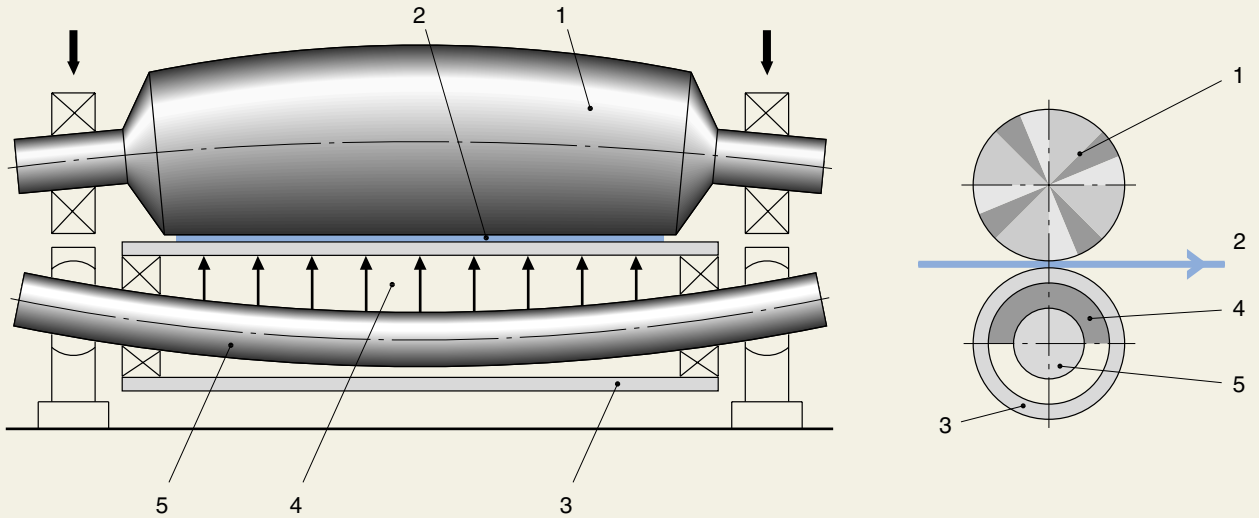

conforms to the shape of the opposing press roll. Deflection-controlled rolls are used as top or bottom rolls and may be driven or non-driven.

In a further development of these rolls, the oil-pressurised chamber has been replaced by a number of hydrostatic shoes individually connected to a pressurised oil system (➔ **fig** 6). With these shoes, the shape of the roll shell can be controlled individually in each zone along the length of the roll.

Deflection-controlled rolls can be made considerably smaller than plain rolls for the same linear load. This is a great advantage.

These rolls are probably the most important ones when it comes to the production of good quality paper. Most of the major manufacturers of paper machines include this type of roll in their product ranges, though the actual design used differs a little. The rolls are known by different brand names, such as

CC rolls (Beloit),
Sym rolls (Valmet),
NIPCO rolls (Voith Paper),
Swimming rolls (Küsters),
HYDREIN rolls (Kleinewefers).

Heated press rolls

Heated calender rolls have been common for many years and now there is a trend towards heated press rolls as well. Heating can be applied to all kinds of press rolls. Therefore, there is intensive development of heated press rolls to find out the best design, heating temperature and nip pressure for different paper grades.

High temperature pressing, also called impulse drying, gives a higher dryness than normal pressing and also improves the sheet properties.

Fig 6

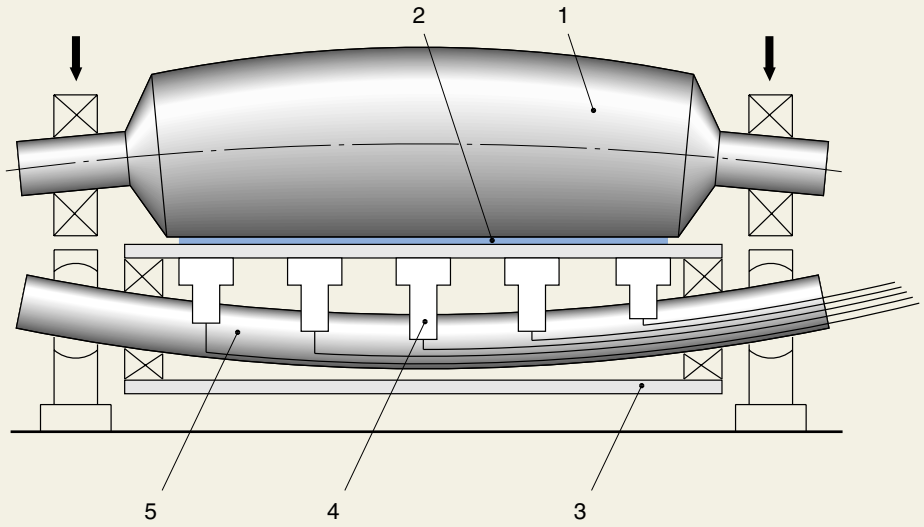

Zone-controlled deflection-compensating press roll
1. Top roll
2. Paper web
3. "Flexible" steel shell
4. Hydrostatic shoe
5. Stationary shaft

Bearing arrangements

Felt rolls

Spherical roller bearings and CARB bearings are the recommended bearing types for this position. The bearings in modern machines are mainly oil lubricated and mounted direct on the journals. However, mounting on sleeves is common in old slow running machines.

Seals for oil lubricated bearings are normally not as efficient as the multi-stage labyrinths used for grease lubricated bearings. However, seals for oil lubricated bearings in the press section have to be equally efficient due to the exposure to water during operation and hosing down. **Fig** 7 shows an arrangement with improved seals for oil lubricated felt roll bearings.

A bearing arrangement for guide and stretch rolls is shown in **fig** 9, **page 33**. This shows a grease lubricated guide and stretch roll in the wire section, but this arrangement can be applied to the press section as well. However, oil lubrication can also be used for guide and stretch rolls if the seals are modified.

Bearing types

SKF recommends the use of spherical roller bearings of series 223 and 232 and CARB bearings of series C 23 and C 32, but spherical roller bearings of series 222 and CARB bearings of series C 22 can also be used.

Felt roll bearing arrangement with improved seals, oil lubricated

Fig 7

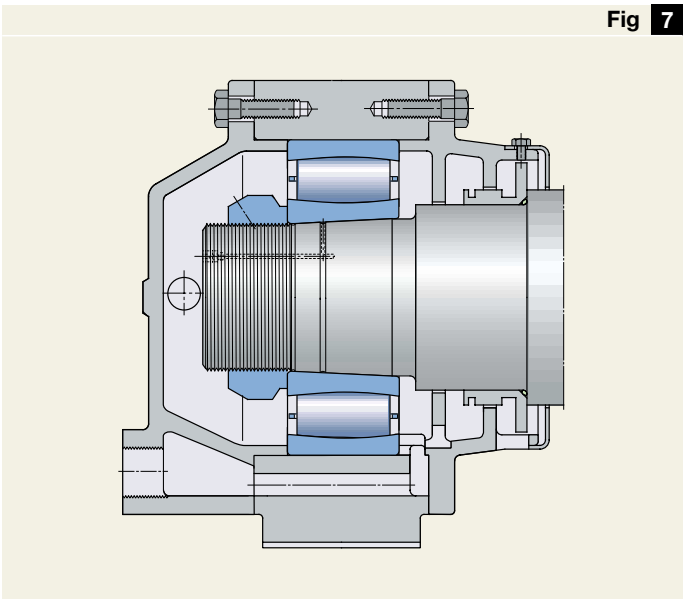

Journal and housing tolerances for felt rolls

Journal	Mounting on a sleeve		h9 (IT5/2)
	Direct mounting on a cylindrical journal	(65) to 100 mm	m6
		(100) to 140 mm	n6
	Mounting on a tapered journal, see “Tolerances”, **pages 22–24**		
	Support bearing seating		
	Cylindrical roller bearing	Spherical roller bearing	
	(40) to 100 mm	(40) to 65 mm	m5
		(65) to 100 mm	m6
Housing			G7

See also “Tolerances”, **pages 22–24**

Both spherical roller bearings of series 222 and cylindrical roller bearings of series NUB 2, with wide inner ring, can be used as the support bearing.

The main bearings, as well as the support bearings, are usually selected with C3 radial internal clearance.

Selection of bearing size

Bearing selection should be based on life calculations according to the recommendations on **pages 11–12**. The recommended L_{10h} and L_{10ah} lives are 120 000 hours. If the mass of the felt roll is known, the radial bearing load can be roughly estimated with the aid of the following equations

$G = g\ m$

$K_R = 2\ q_1\ L + G$

$F_r = 0{,}5\ K_R$

$F_a = \mu\ F_r$ (for a spherical roller bearing as non-locating bearing)

$F_a = 0$ (for a CARB bearing as non-locating bearing)

where
G = roll weight, N
g = 9,81 (acceleration of gravity), m/s^2
m = roll mass, kg
K_R = resultant roll load, N
q_1 = felt tension, N/mm
L = felt width, mm
F_r = radial bearing load, N
F_a = axial bearing load, N

μ = coefficient of friction between housing and outer ring (use μ = 0,15 in the calculation)

Generally it can be assumed that the felt tension is 3–7 N/mm over the length of the roll. The axial bearing load caused by felt guidance can be ignored in the case of felt rolls.

Lubrication

Oil lubrication is often selected for these bearings. There are several reasons for this. One is that if grease lubrication were to be employed for the bearings of high-speed machines, the operating temperatures would be so high that regreasing would have to be carried out far too frequently and excessive amounts of grease would contaminate the machine. Another reason is that there are other oil lubricated bearings nearby. Demands made on the oil for the felt roll bearings are not as great as for the oil for the press roll bearings. Therefore, the same oil as for the press rolls can be used, provided this has been correctly selected. If grease lubrication is chosen see under wire rolls.

For further information see the "Lubrication" chapter, **pages 83–103** and the Lubrication examples 7 and 8, **pages 118–121**.

Plain press rolls

Plain press rolls are sometimes called solid press rolls although these rolls are not always solid all the way through. A plain press roll features as one of the rolls of a single-nip press and as the central press roll of a multi-nip press. The plain rolls are normally steel rolls coated with different synthetic materials, but earlier granite rolls were used.

The bearing housings for press rolls are exposed to heavy loads and therefore the use of non-split housings is recommended.

The example shown in **fig 8** is designed for grease lubrication and a double axial labyrinth seal is incorporated. As further protection, a protective cover should be fitted to prevent the entry of water during hosing down operations.

Fig 9 shows an oil lubricated press roll bearing arrangement. Where a circulating oil system is used, a flinger prevents oil escaping from the housing, while the radial labyrinths serve to keep out the water.

Bearings mounted on withdrawal sleeves are sometimes used, but today machine builders generally prefer bearings mounted direct on tapered seatings. If the builders have proper machining facilities this design will be less expensive, but another important advantage is the higher degree of accuracy with regards to roll runout.

Press roll bearing arrangement, grease lubricated

Fig 8

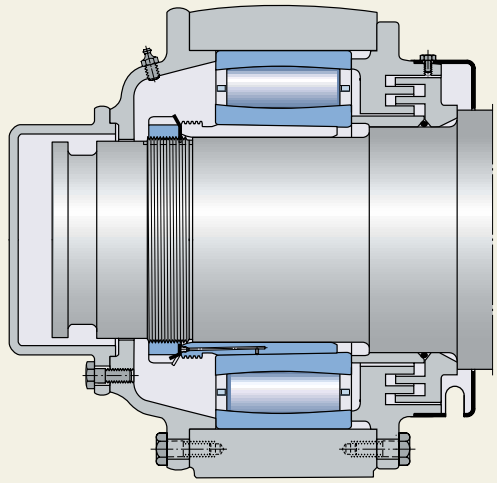

Journal and housing tolerances for plain press rolls

Journal	Mounting on a sleeve	h9 (IT5/2)
	Mounting on a tapered journal, see "Tolerances", **pages 22–24**	
Housing	Bore diameter	
	up to 400 mm	G7
	above 400 mm	F7

See also "Tolerances", **pages 22–24**

Bearing types

SKF recommends spherical roller bearings of series 231 and 232 and CARB bearings of series C 31 and C 32. Bearings with C3 radial internal clearance are recommended. Bearings with increased running accuracy (C08 or VQ424) are an advantage during regrinding and to minimise the roll runout, especially at high speeds.

Selection of bearing size

Bearing selection must always be made on the basis of proper calculations. This is especially important for new and modernised press parts with multi-nip presses. The life calculation for a central press roll bearing should be based on the loads from all nips involved as well as the roll gravity force.

The recommended L_{10h} and L_{10ah} lives are 120 000 hours. The following equations should be used when calculating the magnitude of the loads

$G = g\ m$

$P_1 = F_{N1}\ L$

$P_2 = F_{N2}\ L$

where
G = roll weight, N
g = 9,81 (acceleration of gravity), m/s^2
m = roll mass, kg
P_1 = press load from the first press nip, N
P_2 = press load from the second press nip, N
F_{N1} = linear load of the first press nip, N/mm
F_{N2} = linear load of the second press nip, N/mm
L = press nip length, mm

When G, P_1 and P_2 are known the resultant roll load K_R can be established either graphically, as in **fig** 10, or by trigonometric calculations.

The radial bearing load F_r is then calculated as follows

$F_r = 0{,}5\ K_R$

$F_a = \mu\ F_r$ (for a spherical roller bearing as non-locating bearing)

$F_a = 0$ (for a CARB bearing as non-locating bearing)

where
F_r = radial bearing load, N
K_R = resultant roll load, N
F_a = axial bearing load, N
μ = coefficient of friction between housing and outer ring, use $\mu = 0{,}15$ when calculating.

Press roll bearing arrangement, oil lubricated

Fig 9

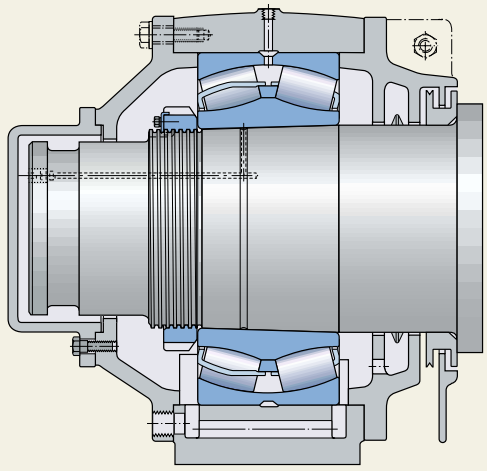

The resultant load K_R on central press roll

Fig 10

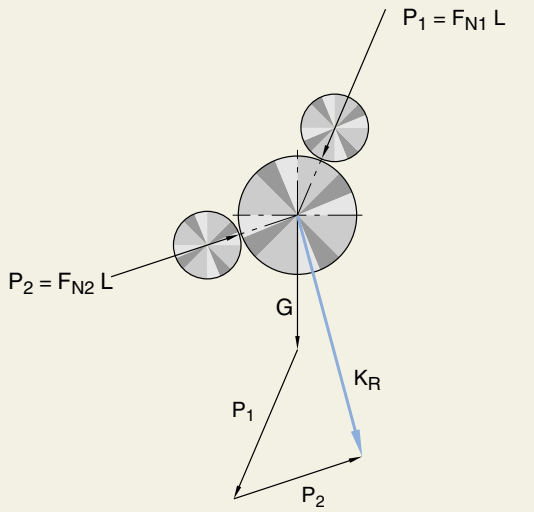

Lubrication
The two most important factors influencing lubrication are the viscosity, achieving a satisfactory oil film, and the oil cleanliness, with respect to water and solid particles.

Grease or oil lubrication may be used for the press roll bearings. Grease lubrication is sometimes selected for machines with low operating speeds, e.g. pulp dryers.

With high-speed paper machines the frictional heat in the large bearings on the press rolls is so great that large quantities of circulating oil must be passed through the bearings to dissipate the heat. A low oil inlet temperature, obtained with a cooled tank in a separate system, is thus advantageous from a viscosity point of view.

Press roll bearings sometimes run at speeds above the speed rating in the General Catalogue. When large bearings rotate at high speeds there is a risk of smearing, i.e. sliding of unloaded rollers when they enter the loaded zone. In the press part this risk is highest for press roll bearings because of their heavy rollers. Therefore the lubricant requirements for the press section will be dictated by the press rolls.

As protection against corrosion and smearing has top priority for these bearings the use of a high viscosity circulating oil, for instance 220–320 mm^2/s at 40 °C, with efficient EP and rust-inhibiting additives is recommended.

The question often arises as to whether it is possible to use the dryer section oil to lubricate the press section bearings. However, dryer section oils do not always meet the recommendations above.

For further information see the "Lubrication" chapter, **pages 83–103** and the Lubrication examples 9 and 10, **pages 122–125**.

Suction press roll

The design of these rolls is the same as that of suction rolls in the wire section, where bearing selection etc. is dealt with (➔ **pages 35–37**).

Old design
Oil lubricated bearing arrangements for driven deflection-compensating roll

Fig 11

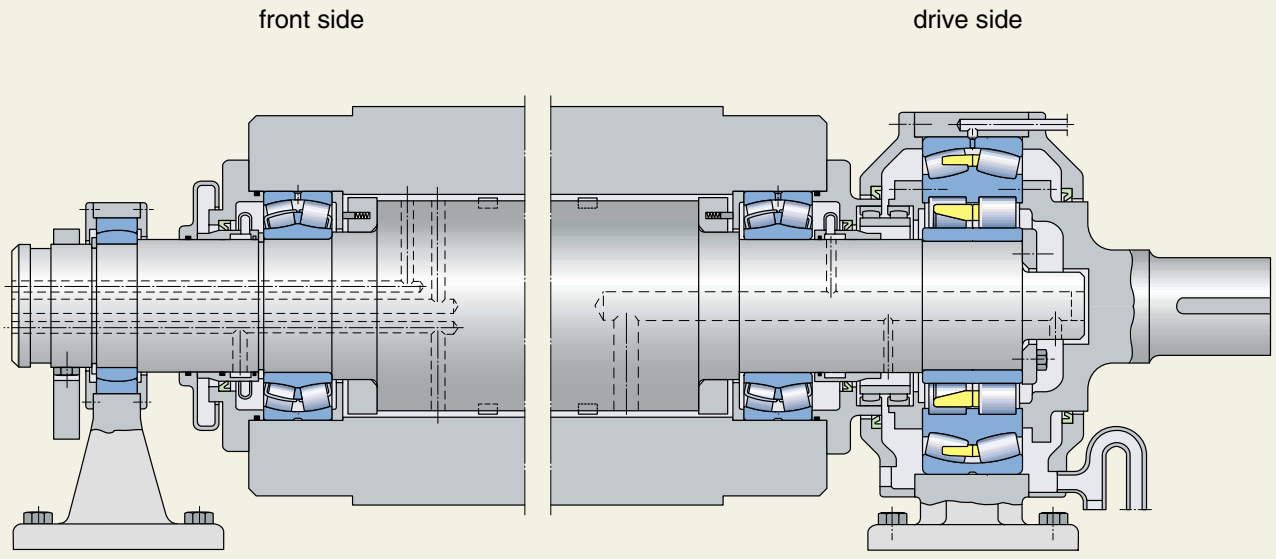

Deflection-compensating rolls

A driven deflection-compensating roll is shown in **fig** 11. In this case the stationary shaft is supported by a spherical plain bearing at the front (locating) side and by a triple ring bearing at the drive (non-locating) side. The roll shell is linked to the drive shaft via the centre ring of the triple ring bearing. Note that only the centre ring of this bearing rotates during operation. This ring must therefore have increased running accuracy, e.g. C08, in order to minimise vibrations taking the form of variation of the nip pressure.

Deflection-compensating rolls present the greatest challenge of all when designing reliable bearing arrangements for paper machines. This is because the main bearings that support the shell of the roll operate with "rotating misalignment" of the outer ring in most cases (→ **fig** 12). Under such conditions, a number of phenomena detrimental to the smooth operation of the bearing occur.

The greatest risk is edge loading of the rollers. The load is displaced towards one end of the rollers because of the tendency of the misaligned rotating outer ring to pull the rollers with it axially as it oscillates with each revolution. The edge loading of the rollers can be so severe as to cause them to suddenly jump back to their equilibrium position. This happens if the axial component load on the roller, as a result of the edge loading, exceeds the roller-to-raceway friction. This behaviour involves a major risk of smearing damage to rollers and raceways.

Another phenomenon is that the speed of the rollers varies through each revolution of the ring. The speed of the rollers in one row is higher than that of the rollers in the other row through one half of the revolution and lower through the other half. This behaviour means that there is a risk of excessive loads being imposed on the cage bars and of peripheral sliding of the rollers, i.e. a risk of smearing.

Journal and housing tolerances for deflection-compensating rolls

Shell supporting bearings:

Journal	f6
Shell (housing)	N7

Note! For heated rolls where the bearing temperature may be above 140 °C a housing tolerance P7 is recommended.

See also "Tolerances", **pages 22–24**

Triple ring bearings:
The bore diameter and the outside diameter of the bearings have the same tolerances as standard bearings, and the tolerances of the journal and housing seatings are selected so that clearance fits will be obtained. The following tolerances are generally recommended:

Journal	f6
Housing	G7

Fig 12

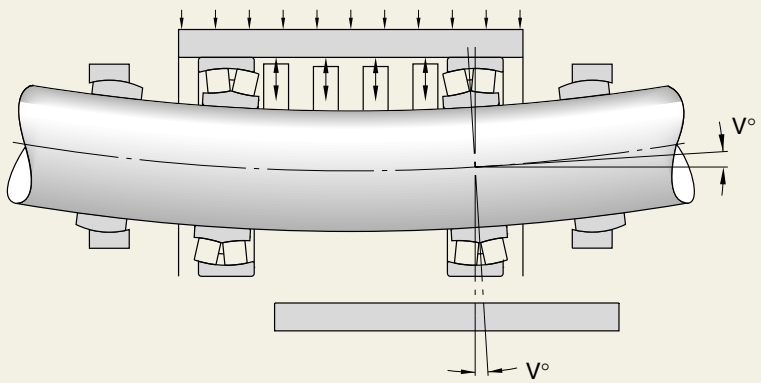

"Rotating misalignment"

The best way to avoid problems with the bearings in this position is to minimise the angle of misalignment. The contact angle and internal clearance of the shell supporting bearing play a major role in operational performance. Various arrangements can be used to drive deflection-compensating rolls. The first such rolls were driven via a triple ring bearing but nowadays most machine manufacturers have opted for an integrated gear unit and zone-controlled nip pressure. An example of such an arrangement is shown in **fig** 13.

Bearing types

Where shell-supporting bearings are subject to normal loads and misalignment close to 0,3 degrees, calculations have proved that bearings of series 230 and 239 give the best results. This has been verified by practical experience, though each case should be considered individually, since bearings from series 238 and 248 have also been used successfully.

Triple ring bearings are supplied in three different designs – spherical/spherical roller bearing, spherical/cylindrical roller bearing and cylindrical/spherical roller bearing. In all cases the bearing centre ring connects the shell with the drive shaft and is therefore provided with tapped bolt holes in both faces.

The triple ring bearings do not belong to a standard range, and are identified by drawing numbers.

Selection of bearing size

The selection of the size of the shell supporting bearings is usually dictated by the available space. The calculated bearing life is often very high because the major share of the nip load is supported via the hydraulic roll crowning.

The triple ring bearing is regarded as two bearings when it comes to life calculations. Both the “inner” and “outer” bearings have to reach the recommended calculated life, L_{10h} and L_{10ah} lives are 120 000 hours. The lives of triple ring bearings are very rarely calculated nowadays, because these bearings are seldom used in new designs of deflection-compensating rolls.

Modern design
Oil lubricated bearing arrangements for driven, zone-controlled deflection-compensating roll

Fig 13

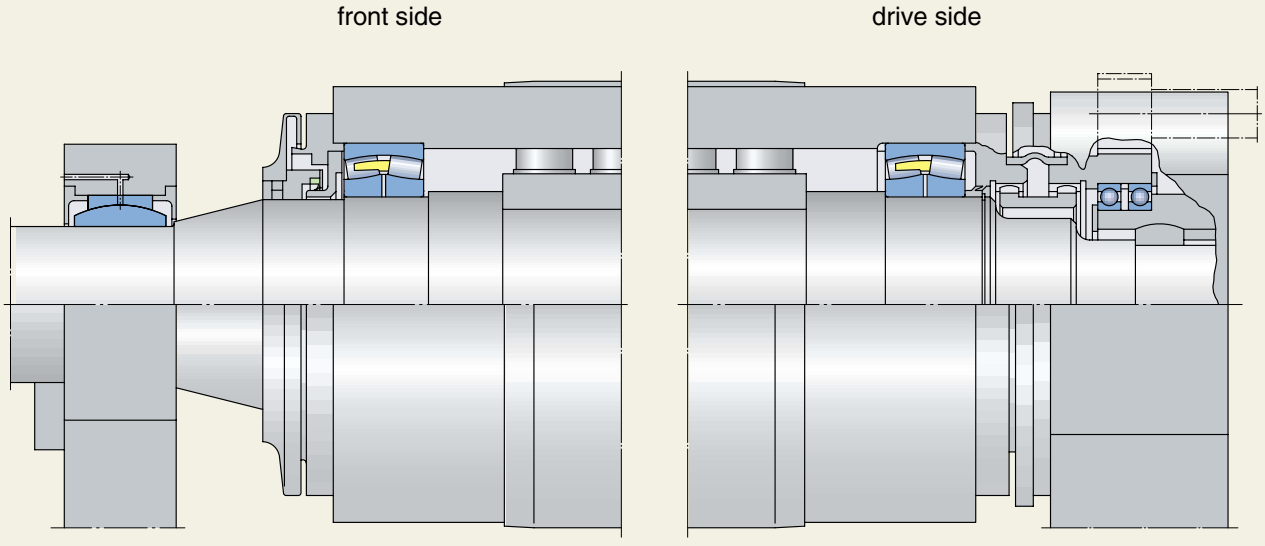

Lubrication

The lubricants for shell supporting bearings are required to have AW or EP additives and give a thick oil film, especially if the deflection-compensating roll is heated. When the temperature allows, EP additives should be selected.

Triple ring bearings must always have circulating oil lubrication. In some rolls, the outer bearing is lubricated by a separate circulating oil system. The inner bearing is sometimes lubricated with the same oil as that supplied to the hydraulic roll crowning. In more recent installations, the lubricating oil is pumped into the inner bearing through holes drilled for this purpose in the inner ring. In early designs of these rolls, the flow of oil used to lubricate the inner bearing was sometimes less than that used for the outer bearing. However, SKF computer calculations show that the best result, with all the three rings having almost the same temperature, will be obtained if the same flow of oil is supplied to the inner and outer bearings.

The oil flows for the shell supporting bearings and the triple ring bearing should be large enough to keep the bearing temperature below 80 °C, because many of the EP additives on the market do not perform satisfactorily at higher temperatures. In heated rolls it is not always possible to keep the bearing temperature below 80 °C. In such cases it is necessary to select an oil with AW additives.

For further information see the “Lubrication” chapter, **pages 83–103** and Lubrication example 11, **pages 126–127**.





4 Dryer section

Bearing arrangements 55

Dryer section

When the web has left the press section and enters the dryer section it has water content of 50–65 %. Drying is completed in the dryer section so that the paper has an ambient moisture content level of 5–10 %.

Drying is normally accomplished by moving the web along an S-shaped path over a double row of heated drying cylinders.

When starting up the machine, or when the web breaks, a strip of paper about 200 mm wide is pulled through the dryer section by means of two ropes running at the front side through pulleys and grooves in the cylinders. Compressed air is used in modern high-speed machines to blow the strip between the cylinders.

In modern paper machines the whole of the dryer section is encased in an enveloping dryer hood and the ambient temperature inside the hood is 80–100 °C.

The felt run

The felt run consists of a double or a single (serpentine) felt. With the double felt, a top felt is used for the top row of cylinders and a bottom felt for the bottom row of cylinders (➔ **fig** 1). At high speeds double felt runs can cause web flutter and nowadays a single felt run (➔ **fig** 2) where the web is supported the whole time by the felt, is used for high-speed machines.

Double felt run
1. Drying cylinder
2. Top felt
3. Bottom felt
4. Paper web

Fig 1

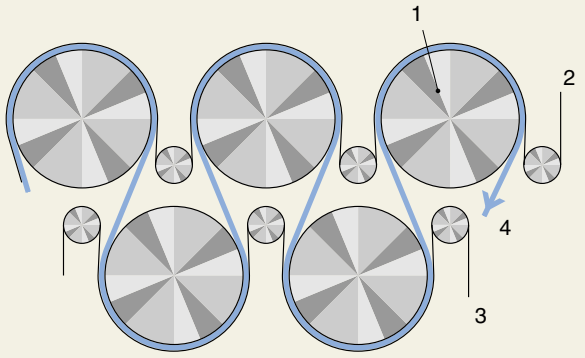

Single felt run
1. Drying cylinder
2. Felt
3. Paper web

Fig 2

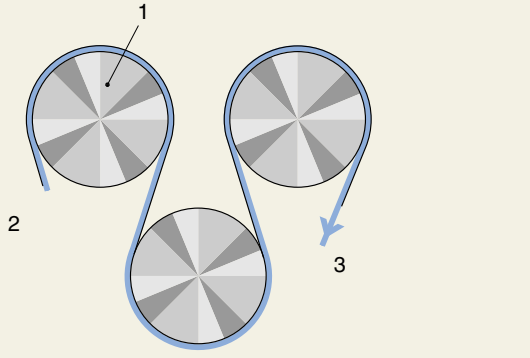

Fig 3

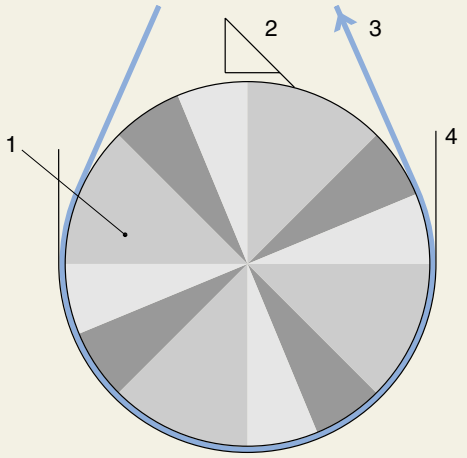

Drying cylinder with doctor
1. Drying cylinder
2. Doctor
3. Paper web
4. Felt

Doctors

Drying cylinders are kept clean by means of doctors (➔ **fig** 3) which, in the event of web breakage, also stop the paper getting wrapped round the cylinder. To prevent uneven wear of the cylinder surface by the doctor blade, the doctor oscillates axially by some 10–20 mm.

In the case of tissue paper, doctors are also used to crepe the paper.

Drying cylinders

The drying cylinders (➔ **fig** 4) are heated by steam. The temperature of the steam can vary between 125 and 210 °C, depending on the thickness of the paper, the speed of the machine and the size of the dryer section. The steam condenses into water when it comes into contact with the cooler surface of the cylinder. The water, together with steam, is extracted from the cylinder via a siphon pipe.

A dryer section may contain 40 to 100 drying cylinders, 1,5, to 2,2 m in diameter. A newsprint machine usually has 40 to 50 drying cylinders and a board machine 90 to 100 such cylinders.

A traditional dryer section is split up into drive groups (➔ **fig** 5). The paper speed for each drive group is individually adjustable to compensate for the contraction of the web as it dries.

A feature of modern drying sections is that the gear drive of each drying cylinder is replaced by a felt drive. Normally the drying cylinder has a gear drive built into the machine frame at the drive side. However, the strength of the felts has increased greatly over the years. This has enabled application of felt drives where the drying cylinders are driven via the felt and felt rolls. When this type of drive system is employed most of the drying cylinders have ordinary bearing housings at both sides.

Vacuum rolls

In modern dryer sections vented steel rolls, known as vacuum or Vac rolls have replaced some of the drying cylinders. These rolls are connected to a vacuum pump and are used with single (serpentine) felt runs in positions where the web passes outside the felt.

Fig 4

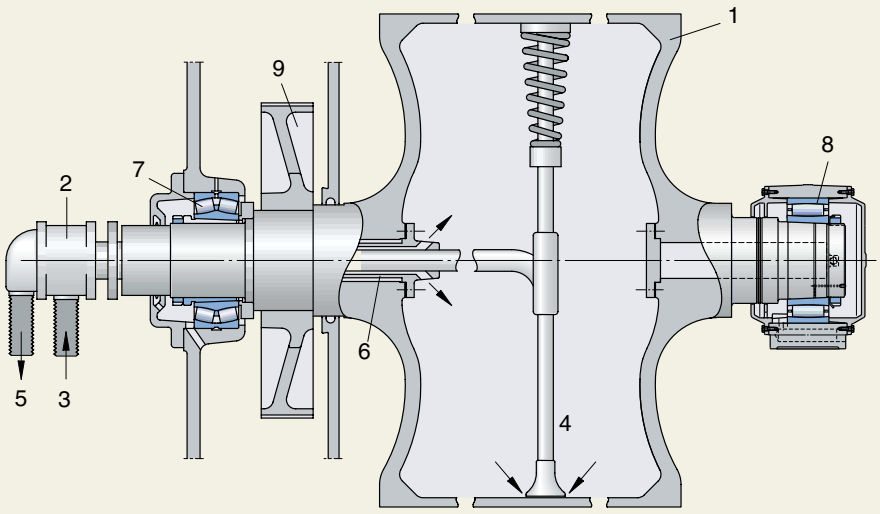

Drying cylinder arrangement
1. Drying cylinder
2. Steam joint
3. Steam inlet
4. Siphon
5. Condensation
6. Journal insulation
7. Drive side bearing
8. Front side bearing
9. Gear drive

Fig 5

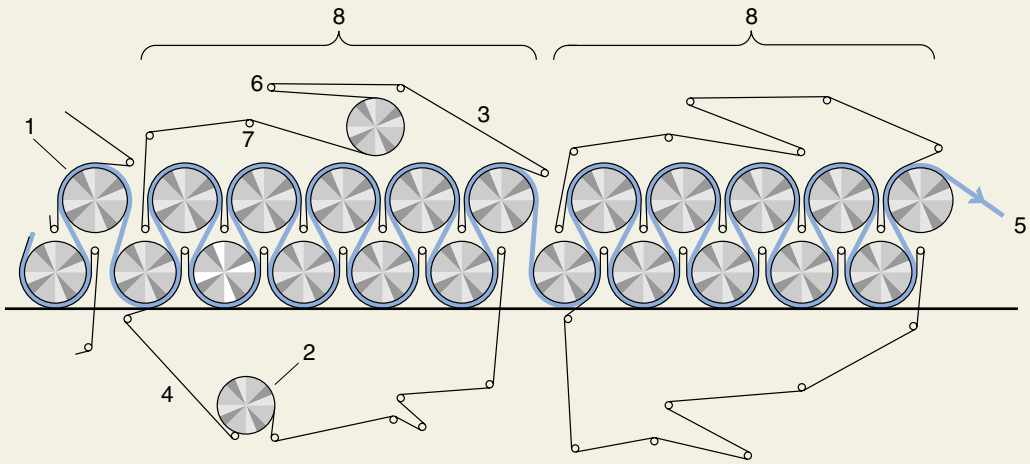

Traditional dryer section
1. Drying cylinder
2. Felt drying cylinder
3. Top felt
4. Bottom felt
5. Paper web
6. Felt stretch roll
7. Felt guide roll
8. Drive group

Fig 6

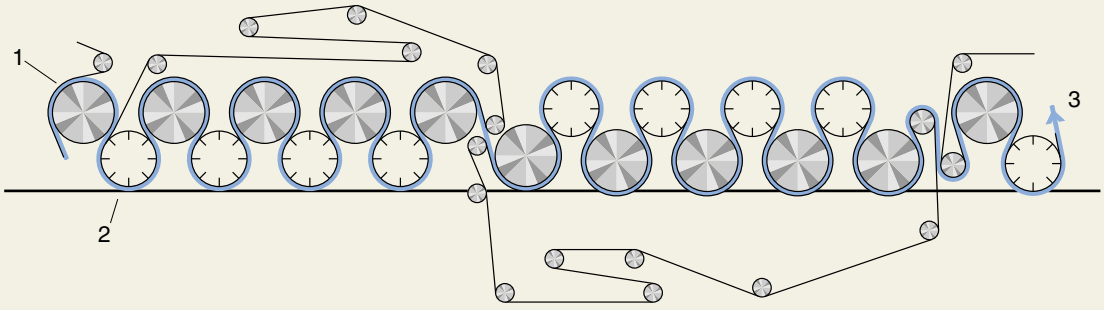

Dryer section with Vac rolls, Valmet
1. Drying cylinder
2. Vac roll
3. Paper web

Fig 7

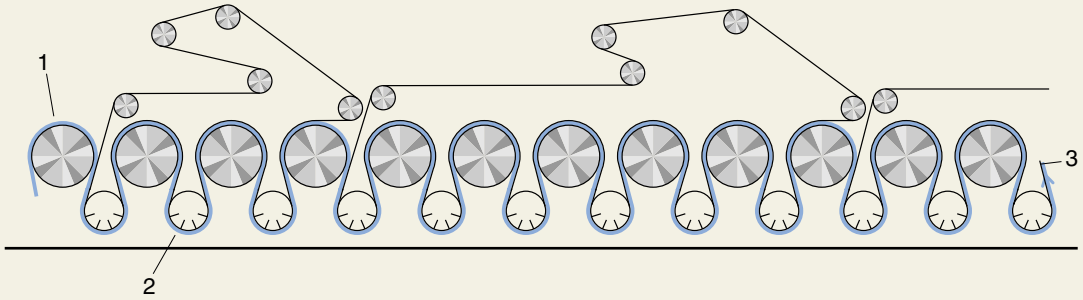

Voith Paper TopDuoRun dryer section
1. Drying cylinder
2. Vacuum roll
3. Paper web

The partial vacuum in these rolls prevents the web stretching and perhaps folding under the influence of the centrifugal force. Vac rolls are placed in both bottom and top positions so that the paper web is treated equally on both sides.

Fig 6, **page 53**, shows a Valmet dryer section with Vac rolls and **fig** 7, **page 53**, the Voith Paper TopDuoRun dryer section.

New drying processes for drying section

There is an ongoing trend to shorten the drying section. This can be achieved by using

- some cylinders with extra high temperature
- belt drying systems e.g. Condebelt from Valmet
- air drying systems.

Breaker stack

The breaker stack (➔ **fig** 8) is positioned in the dryer section and consists of two driven steel rolls, one of which may be a deflection-compensating roll. The stack is used to achieve a smoother paper than can be obtained solely by the machine calendering process. It is also assumed that the breaker stack presses the water from the interior to the outer layer of the web and, by so doing, facilitates subsequent drying. The linear load is usually 10–20 N/mm.

Yankee cylinders

A Yankee (MG) cylinder is used for drying the web in the manufacture of tissue and board. The Yankee cylinder is normally 4–6 m in diameter but can be as much as 9 m. It is designed for steam pressures up to 1 100 kPa (11 bar). The steam temperature can be more than 200 °C. One or two press rolls, positioned below the Yankee cylinder, press the web against the cylinder. The paper adheres to the heated cylinder and it is dried by the heat from the cylinder and by hot air being blown at high speed on to the outside of the web.

In the case of board, the contacting side of the paper takes on a fine-glazed shiny surface. When the board has reached a certain dryness level the surface tension is released and the board can then easily leave the cylinder (➔ **fig** 9). Additional drying of board is carried out using ordinary drying cylinders.

Breaker stack
1. *Drying cylinder*
2. *Guide roll*
3. *Solid press roll*

3a. *Deflection-compensating press roll*

4. *Doctor*
5. *Felt*
6. *Paper web*

Fig 8

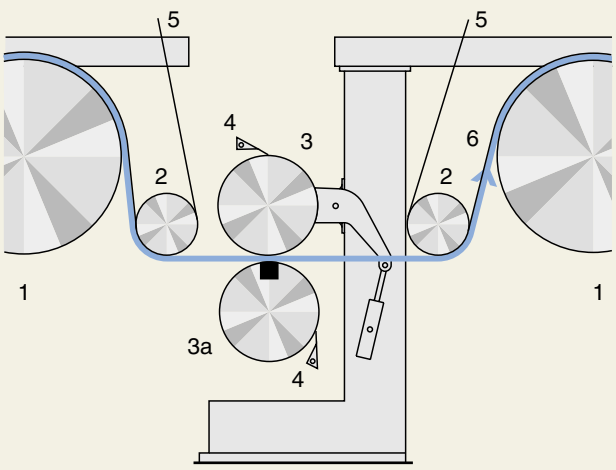

Yankee cylinder for board
1. *Paper web*
2. *Yankee cylinder*
3. *Hood*
4. *Deflection-compensating press roll*
5. *Press roll*
6. *Felt*
7. *Doctor*

Fig 9

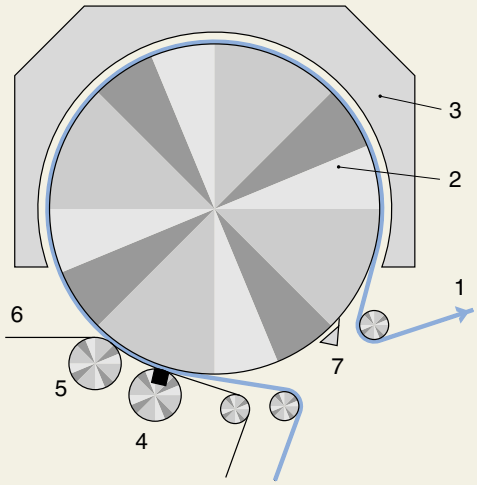

The drying in tissue machines is performed only by a Yankee cylinder. The first press roll is usually a suction press roll in order to obtain efficient dewatering. Tissue paper does not come away from the cylinder shell automatically and has to be doctored off by means of a special crepe blade, which gives a softer paper (➔ **fig** 10).

New drying processes for Yankee cylinders

There is an ongoing trend to produce tissue of higher quality, e.g. there is the TAD (Through Air Drying) concept giving higher softness, strength and absorbency properties. Another possibility is to use a shoe press directly against the Yankee cylinder.

Yankee cylinder for tissue
1. Paper web
2. Yankee cylinder
3. Hood
4. Suction press roll
5. Press roll
6. Felt
7. Doctor

Fig 10

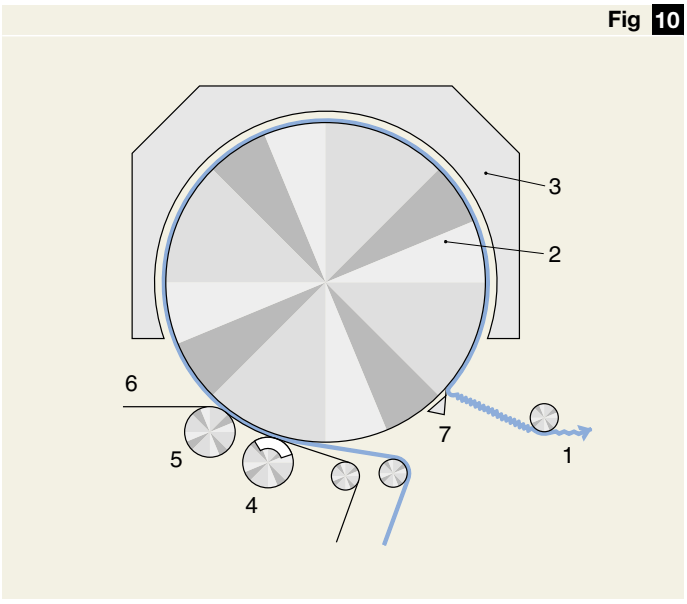

Bearing arrangements

Bearings in the dryer section are exposed to very high temperatures over long periods of time. Unfavourable lubrication conditions are quite common and short starting-up periods cause very high thermal stresses in the bearings. As such, the operating conditions for these bearings are quite severe. Over the years the demands made on the bearings have also increased due to larger machines, higher speeds and higher steam temperatures. Production stops have become very costly, particularly unplanned stops caused by bearing failure in the dryer section. The performance and reliability of the bearings for these applications are consequently of the utmost importance.

Several factors have to be taken into consideration when choosing the bearings for high-temperature applications, e.g. drying and Yankee cylinders. This is also valid for other high-temperature bearing applications such as calenders. The selection of material and heat treatment has to be based on some estimates as well as on several known parameters and serves to minimise the risk of cracked bearing inner rings. The following parameters should be taken into account:

- The maximum total stress in the inner ring.
  This occurs when the machine is started up as the temperature of the journal is then much higher than that of the inner ring, i.e. the inner ring is subjected to tensile stress in addition to the compressive stresses resulting from the loading of the bearing. The stress level also depends on the heat treatment method used for the inner ring.
- The maximum difference between the temperatures of the journal and inner ring.
  This depends mainly on the heating-up time during the starting-up period and whether or not the journal is provided with efficient insulation.
- The drive-up of the bearing.
  The drive-up has to be selected so that the actual operational inner ring-to-journal interference does not exceed the permissible interference for an unheated journal.

- The initial radial internal clearance of the bearing.

  The bearing may become preloaded during start-up if the radial internal clearance is inadequate for such conditions.
- The ability to rapidly detect damage to the inner ring and take action to prevent cracking.

  Since a bearing inner ring will not crack until some time after initial damage has occurred, effective condition monitoring, in combination with remedial action, can prevent such cracking.

For drying and Yankee cylinders SKF recommends the use of HA3 bearings. These bearings have case hardened inner rings, which is the most effective solution to ensure safe operation and to avoid cracked inner rings.

Journal insulation
With the steam temperatures employed in modern machines effective insulation is essential as the temperatures of the bearings would be too high otherwise. **Fig** 11 shows a common design of such insulation in the bore of the journal of a drying cylinder bearing arrangement. The same design in principle is also used for Yankee cylinder applications. This type of journal insulation can reduce the bearing temperature by as much as 35 °C.

It is worthwhile ensuring that the steam joint is also effectively insulated from the end face of the journal. This is often disregarded, but can easily be accomplished with an air gap, as in **fig** 11, or with a 5 mm insulating washer having a thermal conductivity of 0,25 W/(m K) (less than 0,005 of that of steel). With this end face insulation, the bearing temperature can be brought down another 5–6 °C, which is of great value.

Special bearing housings
The ambient temperature in the dryer section is rather high. Consequently all the cylinders will expand considerably during the heating-up period. This in turn makes high demands on the non-locating bearing arrangement. This is one reason why SKF has developed special bearing housings for different rolls and cylinders in the dryer section (➔ **pages 18–19**).

Felt rolls

Mounting the bearings on sleeves was the usual practice in the past but nowadays mounting directly on the journals is more common. **Fig** 12 shows SKF special housings for felt rolls in the dryer section where a spherical roller

Fig 11

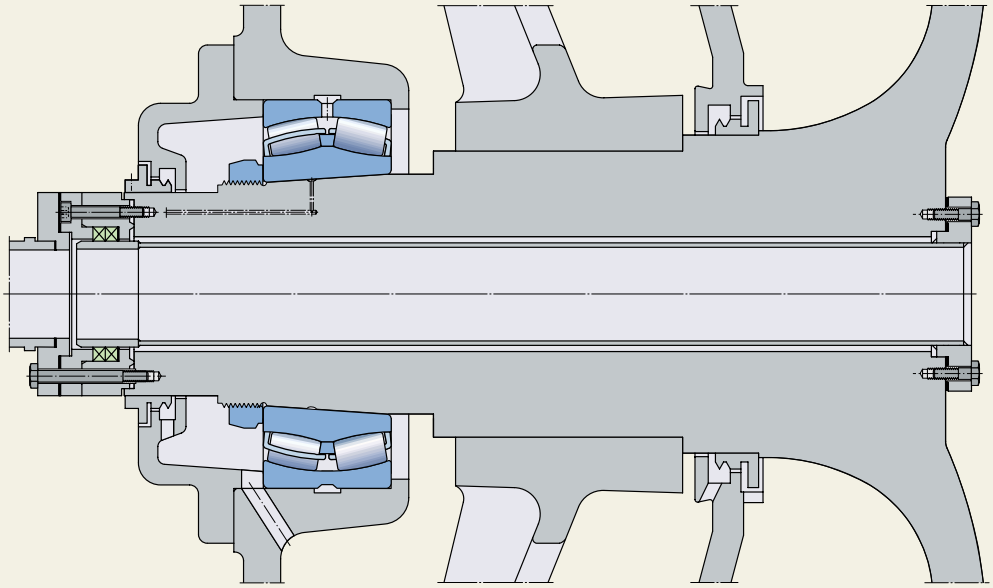

Insulation of drying cylinder, drive side

bearing and a CARB bearing are mounted direct on a tapered journal and are locked by an SKF KMT nut. When bearings are mounted direct on the journal, this should be provided with oil injection grooves to facilitate bearing dismounting.

In cases where more efficient seals are required the housings can be provided with a reinforced sealing arrangement similar to that shown in **fig** 8 on **page 33**.

Bearing types

SKF recommends the use of spherical roller bearings of series 223 and 232 and CARB bearings of series C 23 and C 32, but spherical roller bearings of series 222 and CARB bearings of series C 22 can also be used. Both spherical roller bearings of series 222 and cylindrical roller bearings of series NUB 2, with wide inner ring, can be used as the support bearings for wire stretch and guide rolls (➔ **figs** 7 and 9**, pages 32–33**). The main bearings, as well as the support bearings, should be with C3 radial internal clearance.

Selection of bearing size

Bearings for felt rolls in the dryer section are calculated in the same way as shown for felt roll bearings in the press section (➔ **pages 43–44**). The only difference is the recommended L_{10h} and L_{10ah} lives. These are 200 000 hours in the dryer section.

Journal and housing tolerances for felt rolls

Journal	Mounting on a sleeve		h9 (IT5/2)
	Direct mounting on a cylindrical journal		
	(65) to 100 mm		m6
	(100) to 140 mm		n6
	Mounting on a tapered journal, see “Tolerances”, **pages 22–24**		
	Support bearing seating		
	Cylindrical roller bearing	Spherical roller bearing	
	(40) to 100 mm	(40) to 65 mm	m5
		(65) to 100 mm	m6
Housing	For the dryer section		G7

See also “Tolerances”, **pages 22–24**

Lubrication

The felt roll bearings in the dryer section are lubricated by circulating oil from the same oil system as the drying cylinder bearings. **Fig** 12 shows a typical arrangement for oil circulation lubrication of spherical roller bearings and CARB bearings.

Requirements on the lubricating oil for the dryer section are dictated by the drying cylinders, see the lubrication comments on **page 61**, the “Lubrication” chapter, **pages 83–103** and the Lubrication examples 12 and 13, **pages 128–131**.

Fig 12

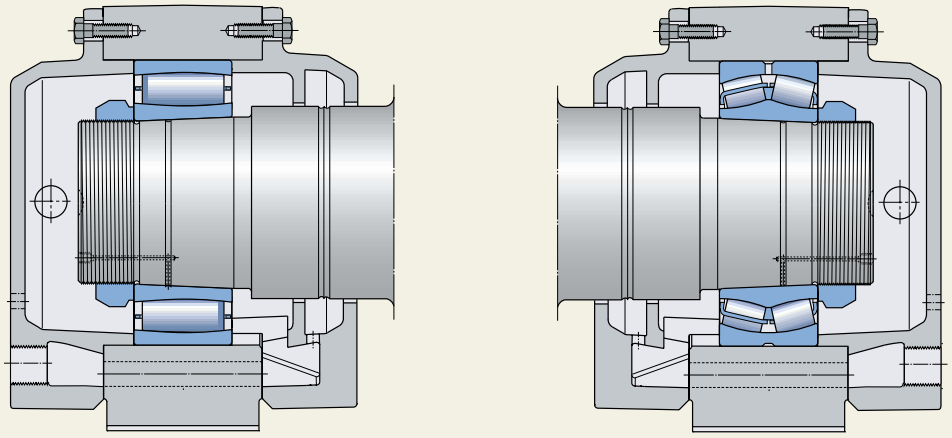

SKF felt roll bearing housings for dryer section with oil circulation lubrication

Drying cylinders

The bearing housing on the drive side can be an integral part of the machine frame where the circulating oil drains into the gear casing, as shown in **fig** 4, **page 52**. These integrated gears are often supported by spherical roller bearings. **Fig** 11, **page 56**, also shows how to arrange for suitable journal insulation which is always recommended.

In modern machines the cylinders are driven via the felt and felt rolls. In such machines most of the drying cylinders have ordinary bearing housings at both sides (➔ **figs** 13, 14 and 15).

The bearings may be mounted direct on tapered journals, or on adapter or withdrawal sleeves. If the bearings are to be mounted on a tapered seating, the journal should be provided with oil injection grooves to facilitate dismounting. If an adapter sleeve (with abutment spacer) is to be incorporated, it is recommended that an annular groove be machined in the journal outside the sleeve position. This groove can then be used to take a backing ring when a hydraulic nut (HMV) is employed to dismount the bearing. Where the bearings are to be mounted on withdrawal sleeves, the journal would have to be threaded to take a lock nut.

Traditional solutions for the front side

Spherical roller bearing with axially free outer ring

With an arrangement as shown in **fig** 13 the axial displacement is accommodated between outer ring and housing.

The friction between outer ring and housing may cause axial forces which are roughly 15 % of the radial bearing load, perhaps even more. This results in a considerable reduction of bearing life. Furthermore, at least for wide machines, the frame is mainly designed for radial loads. Therefore, the general guideline is not to use this bearing arrangement for wire widths above 4 500 mm.

Example: An induced axial load of 15 % of the radial load on bearing 23052 reduces calculated bearing life by 70 %.

Spherical roller bearing in a housing mounted on rockers

When the housing is mounted on rockers, the axial displacement is accommodated by a slight tilting of the rockers (➔ **fig** 14). Due to the shape of the rockers this gives a pure axial displacement with no displacement in the vertical direction.

In the past this was the best solution and accordingly recommended by SKF for machines with a wire width above 4 500 mm. However, this housing arrangement is rather unstable and

Bearing arrangement for front side with a spherical roller bearing with axially free outer ring

Fig 13

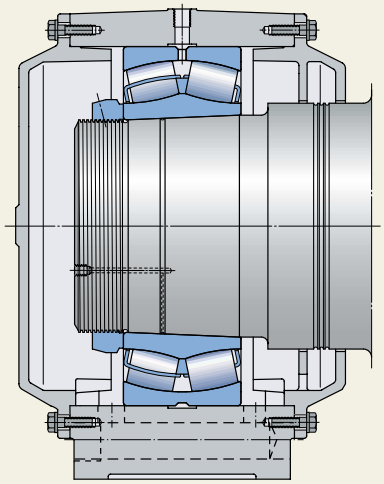

Bearing arrangement for front side with a spherical roller bearing in a housing mounted on rockers

Fig 14

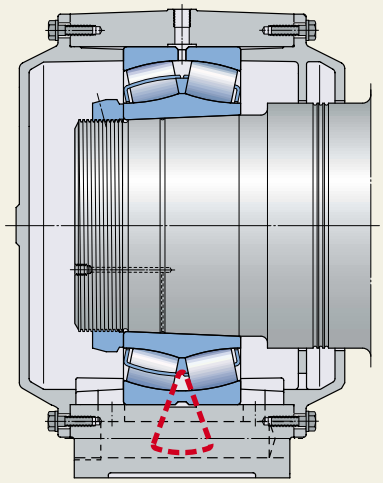

Fig 15

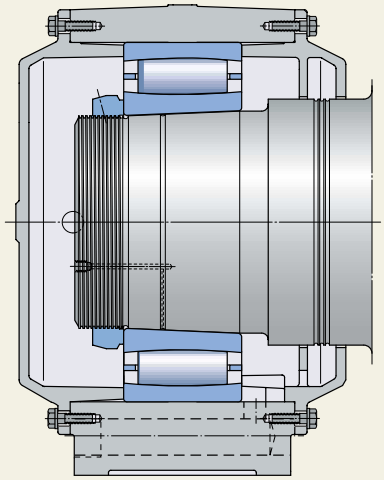

Bearing arrangement for front side with a CARB bearing in a fixed housing

does not damp vibrations as well as solid housings, which may be a problem when upgrading to higher speeds. This arrangement is also sensitive to tilting forces, from rope sheaves and steam joints fastened on the housing for example.

Maintenance costs due to wear of the rocker arrangement may also be high as malfunctioning rockers produce axial loads.

To sum up: with this arrangement there is a risk of axial forces and increased maintenance costs caused by malfunctioning rockers as well as restrictions in the speed capability of the machine because of too high vibration levels.

Front side bearing application with CARB bearing

Bearing life and reliability

A typical bearing arrangement for CARB toroidal roller bearing is shown in **fig** 15. The requirements for journal and housings tolerances as well as selection of bearing size are the same as for other bearing types.

Compared to solutions with spherical roller bearings (➔ **figs** 13 and 14), the calculated bearing lives are increased due to the elimination of axial loads from the steam joint, malfunctioning housing rockers, and, in the case of a fixed housing, friction between outer ring and housing.

Avoiding unplanned stops is even more important than a long bearing service life. For this reason the CARB bearing inner ring is case-hardened (HA3 execution) for maximum resistance to ring cracking.

Housings

The CARB bearing eliminates the need for the rocker housings as the bearing itself will take up the thermal expansion of the cylinder. Instead the bearing can be mounted in a more robust and rigid, fixed housing (➔ **fig** 16). This gives a more stable arrangement and reduced vibration level, which is especially important at increased speeds. Lower vibration level also means less risk of component wear.

Fig 16

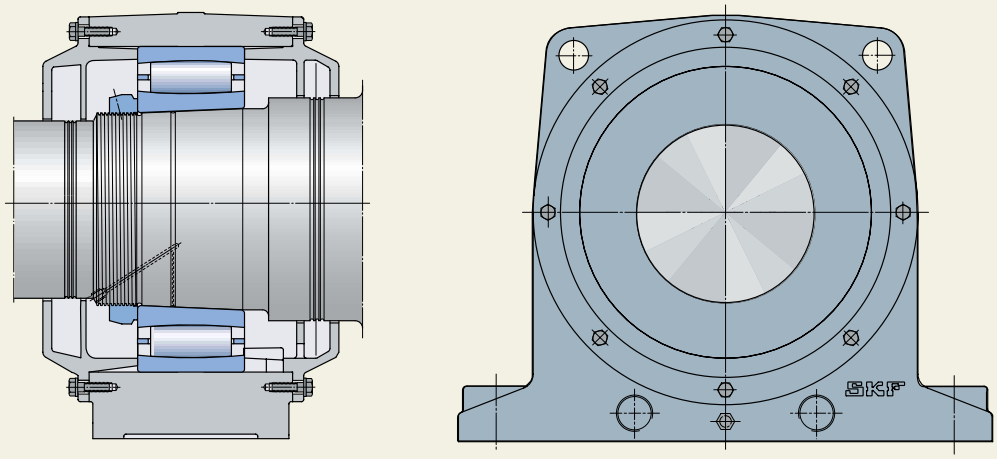

The CARB bearing can be mounted in the SKF one-piece fixed housing, which eliminates the need for rocker housings

Journal and housing tolerances for drying cylinders

Journal	Mounting on a sleeve	h9 (IT5/2)
	Mounting on a tapered journal, see “Tolerances”, **pages 22–24**	
Housing		G7

See also “Tolerances”, **pages 22–24**

The latest housing design can be seen in the Lubrication examples 15–20, **pages 134–145**. For more information about the housings see **pages 18–19**.

Steam joint on front side

Sometimes drying cylinders are equipped with a steam joint for condensate drainage on the front side. Steam joints are used on both rocker housings and plummer pillow block housings (fixed).

As a CARB bearing is mounted in a fixed housing, the axial expansion of the cylinder will be taken up within the bearing. This means that if the steam joint is mounted directly on the cover of the housing, it has to be designed to take up all the axial cylinder expansion internally. This is no problem if the expansion sleeve can accommodate this displacement with regard to space and spring preload (➔ **fig** 17). Otherwise some rework and new springs might be required. The joint is usually equipped with some sort of spherical wear washer. This wear washer is designed to prevent steam leakage and to minimise bending forces. It is normally changed at regular maintenance periods. The total distance the washer moves axially due to wear is roughly 5 mm. To accept both expansion and washer wear, the sleeve may have to be extended.

Different manufacturers of steam joints have their own solutions or designs. As the CARB bearing arrangement is more rigid and stable than a rocker housing arrangement it is much easier to adjust the siphon into a correct position. When a CARB bearing arrangement is used, it is necessary to check that the siphon has sufficient space in the axial direction inside the cylinder as the cylinder expands.

Basic layout of a front side steam joint. It is important to ensure that there is room for axial cylinder expansion inside the steam joint

Fig 17

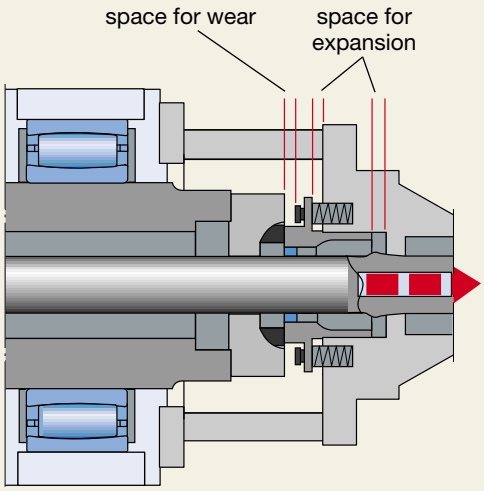

Bearing types

SKF recommends spherical roller bearings of series 230 and 231 for the drive side. For the front side SKF recommends CARB bearings of series C 30 and C 31. However, spherical roller bearings in rocker housings can also be used. As the journals and inner rings will reach a much higher temperature than the outer rings during operation the bearing must have a radial internal clearance greater than Normal. C4 clearance is recommended.

The bearings should have case hardened inner rings (HA3) to reduce the risk of inner ring cracking.

Selection of bearing size

The dryer bearings will be affected by the mass of the cylinder, the felt tension and the water content in the cylinder. The drive side bearing will also be affected by the gear forces. If the front-side bearing housing rests on rockers there is normally no axial force acting on the bearing at that position.

The steam joint, depending on its location and design, may cause one or both of the bearings to be axially loaded.

The recommended L_{10h} and L_{10ah} lives are 200 000 hours. The bearing loads can be estimated with the aid of the following equations

$G = g\ m$

$G_1 = g\ m_1$

$K_R = G + G_1 + 2\ q\ L$

where
G = cylinder weight, N
G_1 = weight of water inside cylinder, N
g = 9,81 (acceleration of gravity), m/s^2
m = cylinder mass, kg
m_1 = mass of water inside cylinder, kg
K_R = resultant roll load, N
q = felt tension, N/mm
L = felt width, mm

Drive side bearing:

$F_r = 0{,}5\ K_R + F_2$

$F_a = F_3 + F_4 + F_5$

$F_5 = \mu\ F_r$

Front side bearing:

$F_r = 0{,}5\ K_R$

$F_a = F_4 + F_5$

where
F_r = radial bearing load, N
F_a = axial bearing load, N
K_R = resultant roll load, N
F_2 = radial gear force, N
F_3 = axial gear force, N
F_4 = axial force from steam box, N
F_5 = axial bearing load, due to friction between housing and outer ring, N (if no CARB bearing or rocker housing is used at the front side)
μ = coefficient of friction between housing and outer ring (use $\mu = 0{,}15$ when calculating)

Generally the felt tension is 3–5 N/mm. In old machines the cylinder often contains a fairly large amount of water. Modern high-speed machines are usually provided with efficient condensed water drainage and the water content is therefore reduced approximately to a value corresponding to 10–15 mm water film around the circumference.

Lubrication
Most problems with drying cylinder bearings are related to the lubrication conditions. The best way to improve the lubrication is to provide the journals with efficient insulation. Circulating oil lubrication is used for all drying cylinder bearings. Owing to high steam and ambient temperatures, large oil quantities of appropriate viscosity must be passed through the bearings to achieve proper lubrication. In modern machines with insulated journals in most cases it is possible to cool the bearing to temperatures below 90 °C.

Many factors influence the calculation of the requisite oil flows, so these must be determined for each individual case. Consideration should be given to bearing size, speed, steam temperature, oil inlet temperature and insulation methods. The influence of bearing load and ambient temperature on the temperature of drying cylinder bearings is small compared with that of the speed, steam temperature and insulation method.

SKF can carry out a computer analysis of the lubrication and temperature conditions for drying cylinder bearings on request.

For further information see the “Lubrication” chapter, **pages 83–103** and the Lubrication examples below
Example 14 (140 °C),
Example 15 (140 °C),
Example 16 (140 °C),
Example 17 (165 °C),
Example 18 (165 °C),
Example 19 (190 °C), and
Example 20 (190 °C)
on **pages 132–145.**

Yankee cylinders

Yankee cylinder bearings are exposed to very high temperatures over long periods of time. The operating conditions are similar to those of drying cylinders but the rotational speed is usually lower, as is the ambient temperature. It is always recommended that this bearing arrangement be provided with effective journal insulation, similar to that shown in **fig** 11, **page 56**. In the case of Yankee cylinder journals the bearing and the steam joint are spaced further apart and end face insulation is not so important.

Yankee cylinders, also called MG cylinders, are carried by spherical roller and CARB bearings mounted direct on tapered journals or on adapter sleeves. If the bearings are to be mounted on tapered seatings, the journals should be provided with oil injection grooves to facilitate dismounting of the bearings.

If an adapter sleeve (with abutment spacer) is to be incorporated, it is recommended that an annular groove be machined in the journal outside the sleeve position. This groove can then be used to take a backing ring when a hydraulic nut (HMV) is used to dismount the bearing.

Split bearing housings with removable covers on both sides are normally used. The split cover at the inside position provides easy inspection, mounting and dismounting of the bearing (➔ **fig** 18).

Before the introduction of CARB bearings there was a need of special front side housings for spherical roller bearings. These housings are provided with rockers in order to reduce axial loads on the bearings and the frame caused by thermal expansion. They also have anchoring hooks in order to keep the bearing housing in position when the cylinder is being pressed upwards by the press rolls. It is necessary to equip the front side bearing housing with rockers in the horizontal plane as well if the press rolls are located in such a position that the resultant load (including gravity forces) on the cylinder diverges more than 30° from the vertical downward position (➔ **fig** 19).

Today SKF recommends the use of CARB bearings on the front side. The CARB bearing eliminates the need for the rocker housings, as the bearing itself will take up the thermal expansion of the cylinder. Instead the bearing can be mounted in a more robust and rigid, fixed housing (➔ **fig** 18). This

Journal and housing tolerances for Yankee cylinders

Journal	Mounting on a sleeve	h9 (IT5/2)
	Mounting on a tapered journal, see “Tolerances”, **pages 22–24**	
Housing	Bore diameter	
	up to 400 diameter	G7
	above 400 mm	F7

See also “Tolerances”, **pages 22–24**

SKF Yankee cylinder bearing arrangement with fixed housings

Fig 18

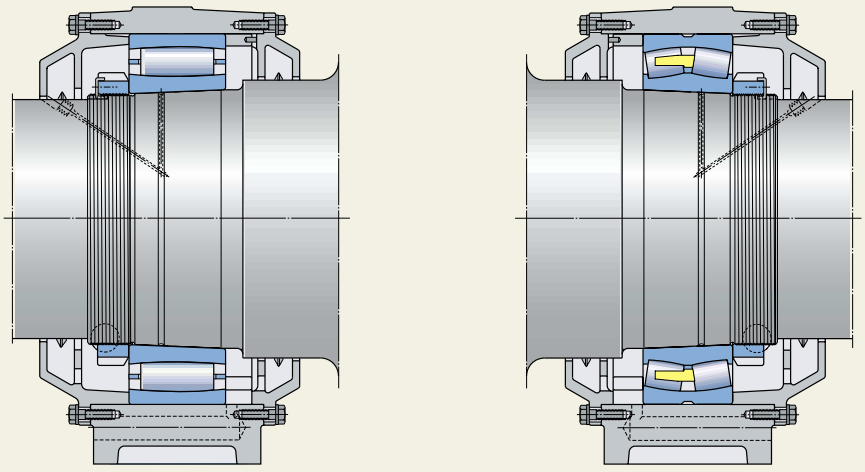

gives a more stable arrangement and reduced vibration level which is especially important at increased speeds. Lower vibration level also means less risk of component wear.

For more information about the housings see **page 19**.

Bearing types

SKF recommends spherical roller bearings of series 230 and 231 for the drive side. For the front side SKF recommends CARB bearing of series C 30 and C 31. However, spherical roller bearings in rocker housings can also be used.

As the journals and inner rings will reach a much higher temperature than the outer rings during operation, the bearing must have a radial internal clearance greater than Normal. C4 clearance is generally recommended. The bearings should have case hardened inner rings (HA3) to reduce the risk of ring cracking and improved running accuracy (C08).

Selection of bearing size

The radial load acting on the Yankee cylinder bearings depends on the mass of the cylinder, the water content and the position and the press load of the Yankee press rolls. The recommended L_{10h} and L_{10ah} lives are 200 000 hours.

In modern machines the Yankee press rolls can be placed at any suitable position around the periphery of the Yankee cylinder. When calculating the press loads the following equations should be used

$$G = g\ m$$

$$G_1 = g\ m_1$$

$$P_1 = F_{N1}\ L$$

$$P_2 = F_{N2}\ L$$

where
G = cylinder weight, N
G_1 = weight of water inside cylinder, N
g = 9,81 (acceleration of gravity), m/s^2
m = cylinder mass, kg
m_1 = mass of water inside cylinder, kg
P_1 = press load from the first press nip, N
P_2 = press load from the second press nip, N
F_{N1} = linear load of the first press nip, N/mm
F_{N2} = linear load of the second press nip, N/mm
L = press nip length, mm

SKF Yankee cylinder bearing housing with side rockers, front side

Fig 19

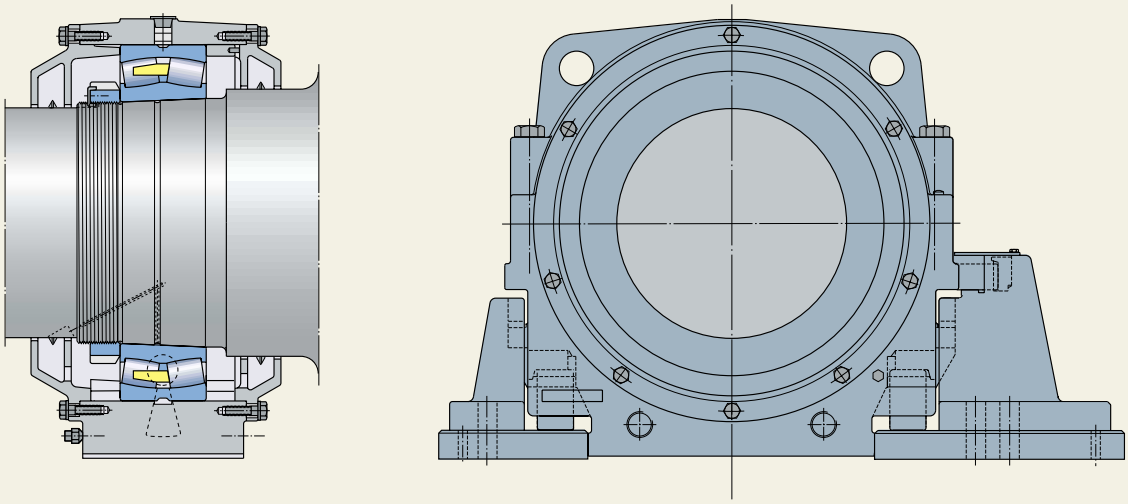

Fig 20

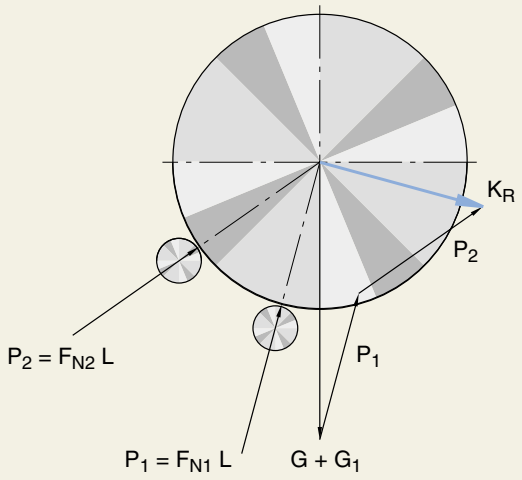

The resultant load K_R on the Yankee cylinder

When G, G_1, P_1 and P_2 are known, the resultant roll load K_R can be established either graphically (➔ **fig** 20) or by trigonometric calculations. The following equations can be used in the case of shaft riding gear drive

Drive side bearing:

$$F_r = 0{,}5\ K_R + F_2$$

$$F_a = F_4 + F_5$$

$$F_5 = \mu\ F_r$$

Front side bearing:

$$F_r = 0{,}5\ K_R$$

$$F_a = F_4 + F_5$$

where
F_r = radial bearing load, N
F_a = axial bearing load, N
K_R = resultant roll load, N,
F_2 = radial force from gear box, N
F_4 = axial force from steam box, N
F_5 = axial bearing load, due to friction between housing and outer ring, N (if no CARB bearing or rocker housing is used at the front side)
μ = coefficient of friction between housing and outer ring (use μ = 0,15 when calculating)

When a spherical roller bearing is used as front side bearing it is normally mounted in a housing with rockers and will therefore not be axially loaded by the cylinder. However there are still some narrow machines produced, where the thermal expansion of the cylinder is taken up via axial movement of the outer ring in the housing. Thrust loads coming from that movement have to be considered. The steam joint, depending on its location and design, may also cause one or both of the bearings to be axially loaded.

Lubrication
A separate circulating oil lubrication system is recommended for the Yankee cylinder bearings. Owing to the high temperature of the steam, large quantities of oil of appropriate viscosity must be passed through the bearings to achieve proper lubrication.

Many factors influence the calculation of the requisite oil flows so, these must be determined for each individual case. Consideration should be given to bearing size, speed, steam temperature, oil inlet temperature and journal insulation method. The influence of bearing load and ambient temperature on the temperature of Yankee cylinder bearings is small compared with that of the speed, steam temperature and insulation method.

SKF can carry out a computer analysis of the lubrication and temperature conditions for Yankee cylinder bearings on request.

For further information see the “Lubrication” chapter, **pages 83–103,** and the Lubrication examples below:
Yankee suction press roll:
Example 21
on **pages 146–147**
Yankee cylinder:
Example 22 (140 °C),
Example 23 (140 °C),
Example 24 (140 °C),
Example 25 (165 °C),
Example 26 (165 °C),
Example 27 (190 °C), and
Example 28 (190 °C)
on **pages 148–161**.

Breaker stack

The breaker stack is a single-nip press positioned in the dryer section and consists of two driven steel rolls, one of which may be a deflection-compensating roll.

The operating conditions are similar to those of ordinary press rolls except for the ambient temperature which is 80 to 100 °C. The same sealing arrangement as for press roll bearings in the press section may be used in the dryer section, even though bearings in this position are subjected to humidity only.

Bearing types

Spherical roller bearings of series 231 and 232 and CARB bearings of series C 31 and C 32 are recommended. Bearings with C3 radial internal clearance should be selected.

Selection of bearing size

Bearing loads are calculated as for ordinary press rolls but the recommended L_{10h} and L_{10ah} life should reach 200 000 hours if possible.

Lubrication

The lubrication recommendations are basically the same as those for press rolls in the press section. The best lubrication condition is achieved by using AW or EP oil in a separate lubrication system, as in the case of deflection-compensating rolls. When the temperature allows, EP additives should be selected.

For further information see “Lubrication” chapter, **pages 83–103**, and the Lubrication examples below:
Press roll:
Example 9 (grease)
Example 10 (oil)
on **pages 122–125**
Paper guide roll:
Example 29 (grease)
Example 30 (oil)
on **pages 162–165**

Journal and housing tolerances for breaker stack

Journal	Mounting on a sleeve	h9 (IT5/2)
	Mounting on a tapered journal, see **pages 22–24**	
Housing	Bore diameter	
	up to 400 mm	G7
	above 400 mm	F7

See also “Tolerances”, **pages 22–24**

Doctors

Specially designed multi-row ball bearings mounted direct on cylindrical journals are recommended for axially oscillating doctors.

The bearing arrangement depends largely upon how the machine manufacturer has designed and selected the associated components. A typical bearing arrangement is shown in **fig** 21.

Selection of bearing size

For help with the selection of bearing size please contact SKF.

Lubrication

Grease lubrication is normally used for the doctor bearings. Relubrication should be carried out every 48 hours. When used in the dryer section, high temperature grease should be selected.

Oil bath lubrication can also be employed, using very high viscosity synthetic oil. The sealing arrangement then has to be modified.

Journal and housing tolerances for doctors

Journal	h6
Housing	J7

See also “Tolerances”, **pages 22–24**

Doctor bearing arrangement

Fig 21

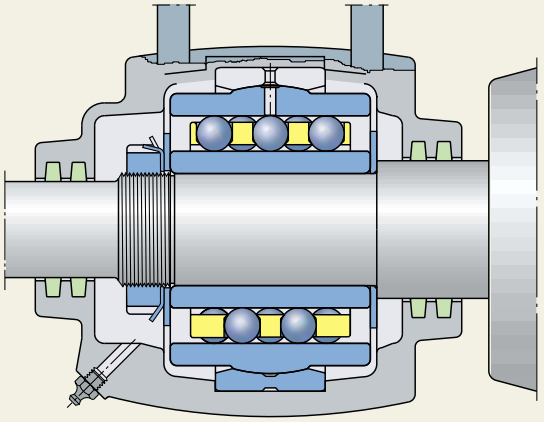


30
29

5 Calenders

Bearing arrangements 72



Calenders

Coated paper is calendered or glazed to achieve a smoother surface and to make the paper shiny. Unglazed coated paper is quite dull and has a fairly uneven surface. Calendering can completely change the character of the paper.

A distinction is made between machine calendering (or machine glazing) which is performed in the paper machine itself and supercalendering which is carried out as a separate operation. The machine calender stack consists of all-steel rolls and imparts a certain smoothness to the paper. However, for most grades of coated paper this is not sufficient, and a subsequent glazing operation in the supercalender is necessary.

Machine calender

The machine calender is positioned after the dryer section and consists of a stack of two to eight steel rolls resting on top each other (➔ **fig** 1). On passing through the nips between the rolls, the paper is compressed and is given a smoother surface. In an eight-roll stack the web is fed from the top downwards through seven roll nips with successively increasing nip pressure under the force of gravity. However, the nip pressures can be increased by applying pressure to the top roll. The king (bottom) roll is usually the driven roll. It is often a deflection-compensating roll which makes for a straight roll nip.

The result of the calendering operation is also temperature-dependent as the paper is more easily formable the higher the temperature. It is therefore customary to heat one or more of the calender rolls using hot water, oil or steam for this purpose.

Machine calender
1. Spreader roll
2. Top roll
3. Intermediate roll
4. Queen roll
5. King roll
6. Paper web

Fig 1

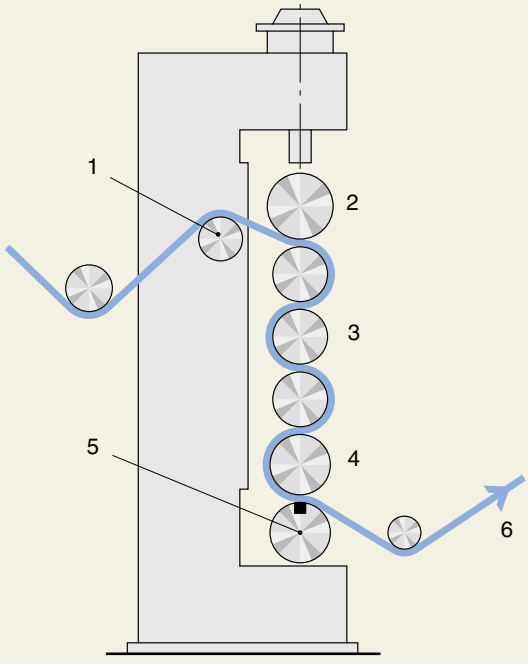

Supercalender

The supercalender, which is placed after the paper machine, consists of up to 14 rolls stacked one on top of the other (➔ **fig** 2).

The other rolls are carried in arrangements which allow them to move in the upright members of the machine frame and the rolls accordingly rest on top of each other. Pressure can be applied to the top roll, either by means of levers, in the case of old supercalenders, or hydraulically, with supercalenders of more modern design.

The linear load in the bottom nip is usually 200–350 N/mm. The supercalender is usually driven by the bottom roll and the production speed may be above 2 000 m/min. The top and bottom rolls are usually of the deflection-controlling type.

The feature that chiefly differentiates supercalenders from machine calenders is that alternate rolls in the stack are made of chilled cast iron and rolls of softer material. To treat the paper equally on both sides, the glazing process is changed by placing two fibre rolls against each other in the middle of the stack. The glazing effect is produced by the sliding that occurs in the nip between the soft and hard rolls. The surface running against the hard roll is given the highest gloss.

To increase the glazing actions some of the cast iron rolls are usually heated by hot water, steam or very hot oil.

Fig 2

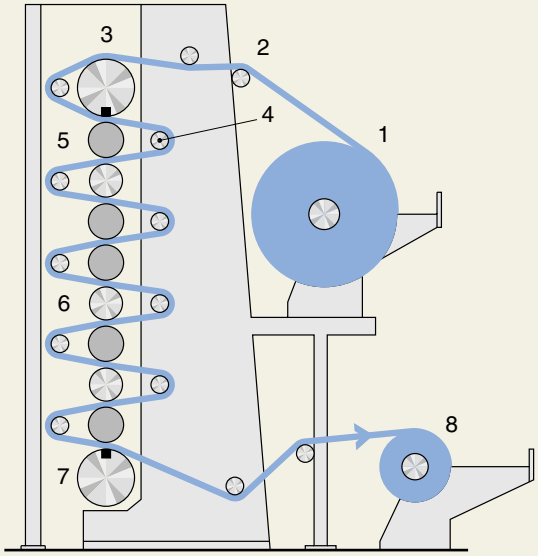

Supercalender
1. *Unwinding jumbo roll*
2. *Spreader roll*
3. *Top roll*
4. *Spreader roll*
5. *Fibre roll*
6. *Intermediate steel roll*
7. *Bottom roll*
8. *Winding jumbo roll*

Soft calenders

Another type of calendering process, called soft-nip calendering is common today. In some cases the soft calender (➔ **fig** 3) is being used to replace both the machine calender and the supercalender. The soft calender consists of one or two single-nip calenders with the linear load being roughly the same as for supercalenders. One roll is a full-steel one while the other one is made of steel and coated with a layer of "soft" synthetic material. The main advantage with a "soft" press nip is that the den-

Fig 3

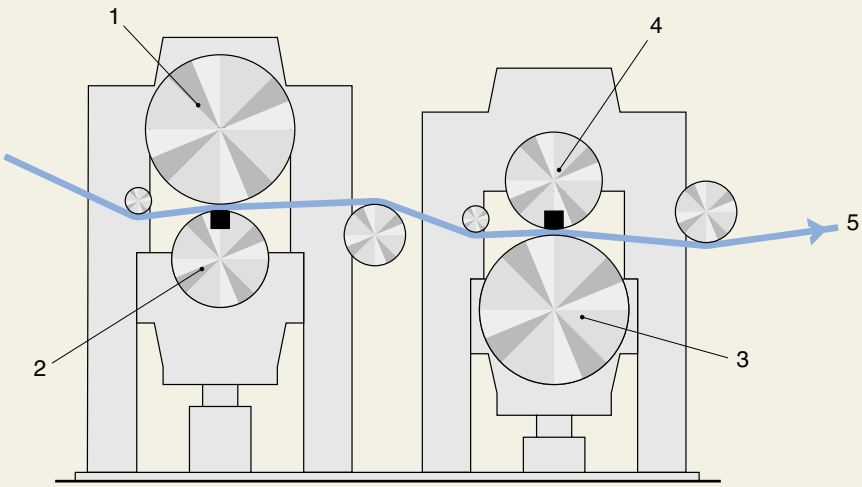

Two "soft" calenders in tandem for equal treatment of both sides of the paper
1, 3. *Heated plain roll*
2, 4. *Deflection-compensating press roll, "soft" coated*
5. *Paper web*

sity of the paper surface will be more even than with a “hard” press nip. This gives better printing properties.

As a further development of the soft-calendering process, one of the rolls is heated. Hot water, steam or very hot oil (at temperatures as high as 200–350 °C) is then supplied to the plain roll or to the deflection-compensating roll.

New calendering concept

There is a trend towards a multi-nip online calendering process for printing and writing paper grades. Voith Paper has their “Janus” calenders (➔ **fig** 4) and Valmet their “Optiload” concept. In both cases, every nip can be individually loaded.

Voith Paper Janus calender
1. Nipco roll
2. Heating roll
3. Elastic roll
4. Reversing roll
5. Paper web

Fig 4

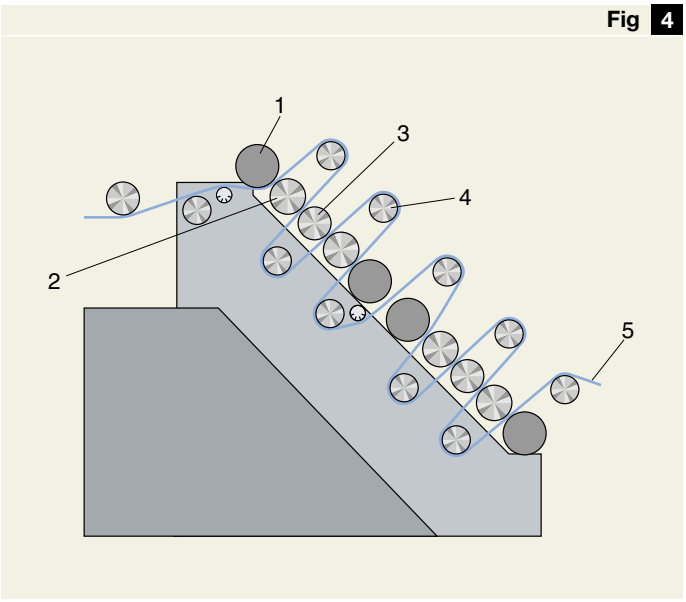

Bearing arrangements

Unheated plain calender rolls

The top, intermediate and queen rolls in a calender stack can be unheated. **Fig** 4 shows a basic design of the bearing housing and seals. The outer form of the housing and the fitting holes have to be made to suit the actual calender frame.

Traditionally the bearings have been mounted on withdrawal sleeves but, owing to demands for improved running accuracy, direct mounting on tapered journals is increasingly common.

Bearing types

On the drive side, for the top, intermediate and queen rolls SKF recommends spherical roller bearings of series 230 and 231, while bearings of series 241 and 232 are used for the bottom rolls of plain type. On the front side, spherical roller bearings can also be used but CARB bearings are more suitable. Bearings from series C 30 and C 31 are recommended for the top, intermediate and queen rolls, whilst bearings of series C 41 and C 32 are used for the bottom rolls of plain type.

Bearings with C3 radial internal clearance should be selected.

Bearing arrangement for unheated plain calender roll

Fig 4

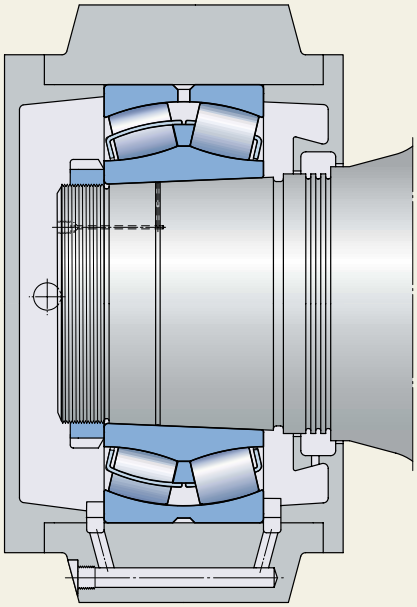

Journal and housing tolerances for unheated plain calender rolls

Journal	Mounting on a sleeve	h9 (IT5/2)
	Mounting on a tapered journal, see “Tolerances”, **pages 22–24**	
Housing	Bore diameter	
	up to 400 mm	G7
	above 400 mm	F7

See also “Tolerances”, **pages 22–24**

For this bearing position, as well as all others with a nip, there is an increasing use of bearings that have improved running accuracy (C08 or VQ424). The need for these bearings increases with faster paper speeds.

Selection of bearing size

The pressure in the roll contact is brought about by the mass of the rolls and the applied press load from the top roll. The top and bottom roll bearings have to carry the main load, while the bearings of the intermediate rolls are only lightly loaded. The recommended L_{10h} and L_{10ah} lives are 120 000 hours.

Bearing selection must always be based on proper calculations.

Lubrication

The lubrication recommendations are the same as those for plain press rolls in the press section (**➔ page 46**).

See also the Lubrication examples 31–32, **pages 166–169**.

Heated plain calender rolls

The heating medium is normally supplied to the intermediate or the queen roll. **Fig** 5 shows a suitable bearing arrangement with insulation for a heated roll. The outside form of the housing and the fitting holes have to be made to suit the actual calender frame.

SKF always recommends insulation of the journals of all kinds of heated rolls.

Bearing types

For the intermediate and queen rolls on the drive side in a calender SKF recommends spherical roller bearings of series 230 and 231, whilst bearings of series 241 and 232 are used for the bottom rolls of plain type.

Spherical roller bearings can also be used on the front side, but CARB bearings are more suitable. For the intermediate and queen rolls SKF recommends bearings of series C 30 or C 31, whilst bearings of series C 41 and C 32 are recommended for bottom rolls of plain type.

In modern high-speed two-roll soft calenders, the heated plain roll is in the top position of the first nip. This may lead to very light loads on the bearing. For such applications SKF recommends use of spherical roller bearings of series 231 as the axially fixed bearing and CARB bearing of series C 31 as the free bearing. In cases of very light loads SKF recommends NoWear™ bearings with coated rollers (L5DA) (➔ **page 26**).

The bearings are mounted either on withdrawal sleeves or direct on tapered journals. For this bearing position, as well as all others with a nip, there is an increasing use of bearings having improved running accuracy (C08 or VQ424). The need for these bearings increases with faster paper speeds.

Calender bearings should have case hardened inner rings (HA3) to reduce the risk of inner ring cracking.

The use of bearings with C3 or, when the temperature of the medium heating the roll is above 100 °C, C4 radial internal clearance is recommended.

Selection of bearing size

The pressure in the roll contact is brought about by the mass of the rolls and the applied press load from the top roll. The top and bottom roll bearings have to carry the main load, whilst the bearings of the intermediate rolls are only lightly loaded.

The bearing selection must always be based on proper calculations. The recommended L_{10h} and L_{10ah} lives are 120 000 hours.

Lubrication

The bearings in this particular application are lubricated by a circulating oil system in which the oil is supplied via the groove and holes in the outer ring of the spherical roller bearings or from the side for the CARB bearings.

The lubrication conditions, such as oil viscosity, oil flow rate and bearing temperature, for heated calender rolls are calculated principally in the same way as for drying cylinders.

Journal and housing tolerances for heated plain calender rolls

Journal	Mounting on a sleeve	h9 (IT5/2)
	Mounting on a tapered journal, see “Tolerances”, **pages 22–24**	
Housing	Bore diameter	
	up to 400 mm	G7
	above 400 mm	F7

See also “Tolerances”, **pages 22–24**

Bearing arrangement for heated plain calender roll

Fig 5

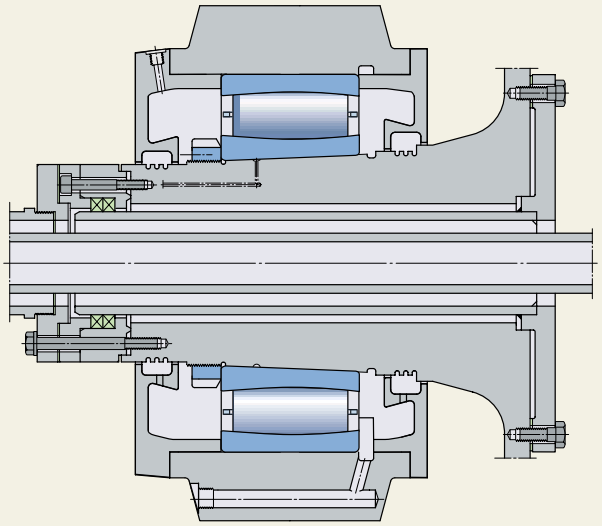

These calculations can be carried out by SKF using programs, specially developed for heated calender rolls.

Sometimes upper roll bearings in soft calenders operate with loads less than the minimum load recommendations in the General Catalogue. If so, NoWear bearings with coated rollers (L5DA) should be selected. Alternatively, approved polyglycol oils could be selected.

For further information see the "Lubrication" chapter, **pages 83–103** and the Lubrication examples 33–35, **pages 170–175**.

Heated deflection-compensating rolls

Heating calender rolls has been practised for many years. The heating is usually applied to plain calender rolls but sometimes to the deflection-controlling rolls instead. It has been stated previously that the deflection-controlling rolls in the press section are the most demanding bearing applications in the paper machine due to "rotating misalignment". This is correct but the demands made on the bearings can be even greater if the deflection-controlling roll is heated as well.

Bearing types

Where shell-supporting bearings are subjected to normal loads and misalignment close to 0,3 degrees, calculations have proved that bearings of series 230 give the best results. This has been verified by practical experience, though each case should be considered individually, since bearings of 238, 239 and 248 series have also been used successfully.

Depending on the operating temperature, bearings with case-hardened inner rings (HA3) may have to be selected. SKF should always be consulted where non-standard bearings are required.

Selection of bearing size

The selection of the series and size of the shell supporting bearings is dictated by the available space in most cases. The calculated bearing rating life is often very long because the major share of the nip load is supported via the hydraulic roll crowning. The recommended L_{10h} and L_{10ah} lives are 120 000 hours.

Journal and housing tolerances for heated deflection-compensating rolls

Shell supporting bearings:	
Journal	f6
Shell (housing)	N7

Note! In heated rolls where the bearing temperature may be above 140 °C P7 housing tolerance is recommended.

See also "Tolerances", **pages 22–24**

Lubrication

The lubrication recommendations are basically the same as those for unheated deflection-compensating rolls in the press section. The temperature of the heating media decides what oil viscosity should be selected.

The oil flows for the shell supporting bearings should be large enough to keep the bearing temperature below 80 °C. This is because many of the EP additives on the market today do not perform satisfactorily at higher temperatures. With heated rolls the bearing temperature can be too high for a mineral oil with EP additives. In such cases it may be necessary to select a synthetic oil for high temperatures even though additives in these oils have proven to be not so efficient.

Sometimes upper roll bearings in soft calenders operate with loads less than the minimum load recommendations in the General Catalogue. If so, NoWear bearings with coated rollers (L5DA) should be selected. Alternatively, approved polyglycol oils could be selected.

For further information see basic recommendations in the Lubrication examples 33–35, **pages 170–175**.


OVER



6 Reeler

Bearing arrangements 78

Reeler

Most large paper machines produce a continuous paper web which is 8–10 metres wide. Such a wide and long web has to be cut and made into smaller rolls before distribution to the customers. The first reeling, or spool, is done in the reeler at the end of the paper machine.

When the roll of paper on the reel reaches the desired diameter reeling is continued on a new spool (➔ **fig** 1). The jumbo roll of paper is transferred to the slitter and rewinder where it is cut and rewound into rolls of the size required by the customer.

Rolls in modern machines can have a weight of up to 100 tonnes.

Fig 1

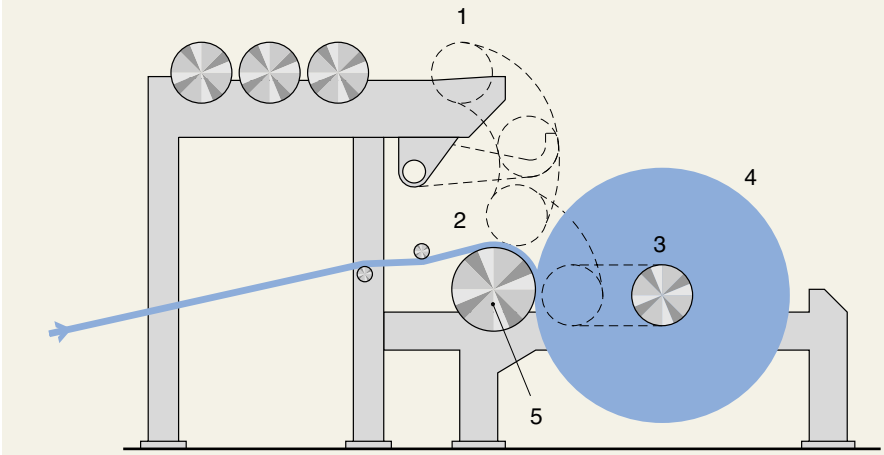

Reeler
1. Reel spool storage
2. Web turn-up to empty spool
3. Reeling position
4. Jumbo roll
5. Reel drum

Bearing arrangements

The reeler bearings work in a relatively good environment. The surroundings are dry and the temperature is around 25 °C. However, it is important for the bearings to be protected from paper dust.

Reel drums

Reel drums are normally carried by spherical roller bearings and CARB bearings mounted on adapter sleeves or direct on tapered journals.

A bearing arrangement for a reel drum is shown in **fig 2**. If an adapter sleeve (with abutment spacer) has been incorporated in the design, it is recommended that an annular groove be machined in the journal outside the sleeve position. This groove can then be used to take a backing ring when a hydraulic nut (HMV) is used to dismount the bearing.

Bearing types

SKF recommends spherical roller bearings of series 231 and 240 as well as CARB bearings of series C 31. Normal radial internal clearance is recommended.

Selection of bearing size

The bearing selection must always be based on proper calculations. The recommended L_{10h} and L_{10ah} lives are 120 000 hours.

Reel drum bearing arrangement

Fig 2

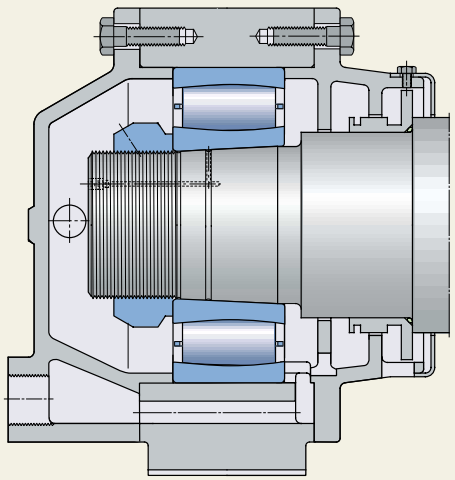

Journal and housing tolerances for reel drums

Journal	Mounting on a sleeve	h9 (IT5/2)
	Mounting on a tapered journal, see “Tolerances”, **pages 22–24**	
Housing		G7

See also “Tolerances”, **pages 22–24**

Lubrication

Slow running machines can be grease lubricated, but mostly bearings in this particular application are lubricated by a circulating oil system. For spherical roller bearings the oil is supplied via the groove and holes in the outer ring of the bearing. An annular groove turned in the housing to coincide with the holes improves lubrication. For CARB bearings the oil is supplied from the side.

For further information see the “Lubrication” chapter, **pages 83–103** and the Lubrication examples 36 and 37, **pages 176–179**.

Reel spools

Reel spools are generally carried by two spherical roller bearings per journal – one mounted on a withdrawal sleeve, the other mounted direct on a cylindrical journal seating.

The bearing housings (➔ **fig 3**) are usually cylindrical and are designed to fit both in the reeler and the winder where the slitting takes place. A lubrication duct should be provided in each housing in order to facilitate lubrication of the bearings.

Journal and housing tolerances for reel spools

Journal	Mounting on a sleeve	h9 (IT5/2)
	Mounting on a cylindrical seating	
	(100) to 140 mm	n6
	(140) to 280 mm	p6
Housing		G7

See also “Tolerances”, **pages 22–24**

Bearing types

SKF recommends spherical roller bearings of series 230 and 231. Normal radial internal clearance is recommended.

Selection of bearing size

During the reeling of the paper in the machine and the re-reeling from the reel spool the paper speed is constant and the rotational speed of the reel spool varies. In order to calculate the bearing life, the equivalent speed and load have to be determined. The recommended L_{10h} and L_{10ah} lives are 120 000 hours.

The constant mean rotational speed n_m which, when multiplied by the reeling time, will give the same number of revolutions as occurs in reality, can be taken from **diagram 1**, **page 80**. n_m in relation to maximum speed n_0 is shown as a function of d_e/d_0, where d_e is the maximum external diameter of the reeled paper and d_0 the reel spool diameter.

A constant mean load, acting on the journal bearing arrangement and equivalent to the real load, can be calculated with the aid of

$$K_m = f_m\, m_0$$

where
K_m = constant mean load, acting on the journal bearing arrangement, N
f_m = factor for calculating constant mean journal load, N/kg, (➔ **diagram 2**, **page 80**)
m_e = mass of reeled paper, kg
m_0 = mass of reel spool, kg
d_e = maximum external diameter of reel, m
d_0 = diameter of reel spool, m
n_m = constant mean rotational speed, r/min
n_0 = maximum rotational speed, r/min

Fig 3

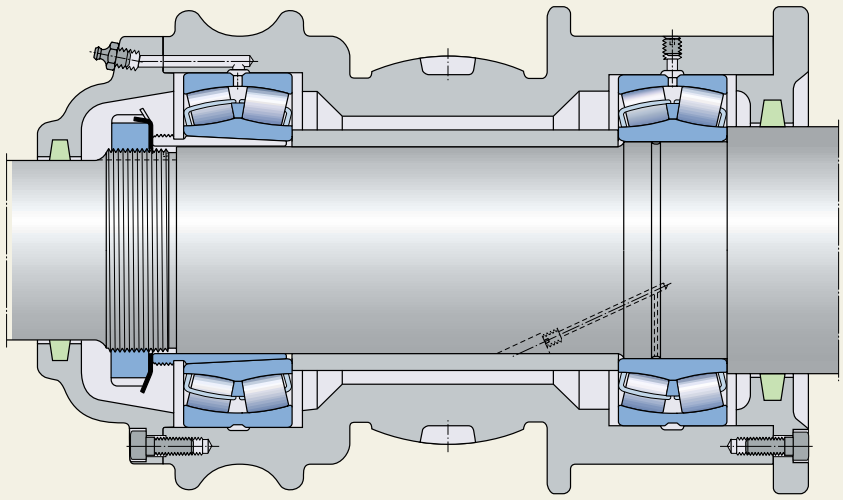

Reel spool bearing arrangement

The diagrams and the equation are valid for reeling as well as re-reeling.

The reel spool has two bearings per journal (➔ **fig 3**, **page 79**) and the housing often rests in different ways when reeling and re-reeling. When reeling, for example, one bearing may take the full load, whereas the load is shared equally between the two bearings during re-reeling.

The re-reeling speed is normally much higher, but of course the total number of revolutions is the same for the two operations. If the bearing load is different, two values, F_{m1} and F_{m2}, are calculated and then a total constant mean bearing load can be calculated using

$$F_m = \sqrt[3]{\frac{F_{m1}^3 + F_{m2}^3}{2}}$$

With $P = F_m$ the total life in number of revolutions L_{10} can be calculated with the aid of the life equation. Since half of these revolutions are for reeling and half for re-reeling, the L_{10h} life in hours should be calculated for each operation; the total L_{10h} life will then be

$$L_{10h} = \frac{(L_{10h1} + L_{10h2})}{2}$$

For reeling

$$L_{10h1} = \frac{1\,000\,000}{60\,n_{m1}} \left(\frac{C}{P}\right)^{10/3}$$

For re-reeling

$$L_{10h2} = \frac{1\,000\,000}{60\,n_{m2}} \left(\frac{C}{P}\right)^{10/3}$$

where
L_{10h} = basic rating life, operating hours
n_{m1} = rotational speed for reeling, r/min
n_{m2} = rotational speed for re-reeling, r/min
C = basic dynamic load rating, N
P = equivalent dynamic bearing load, N

n_{m1} and n_{m2} are calculated with the help of **diagram 1**.

The required value L_{10h} is estimated in relation to the number of reel spools available. The bearings are generally oversized.

Diagram for determining the constant mean rotational speed

Diagram 1

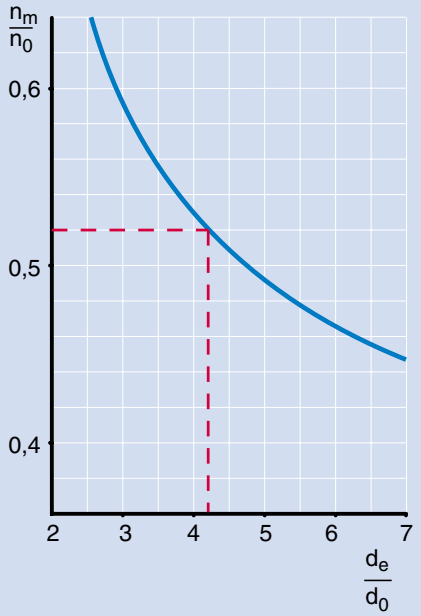

Diagram for determining factor for calculation of constant mean journal load

Diagram 2

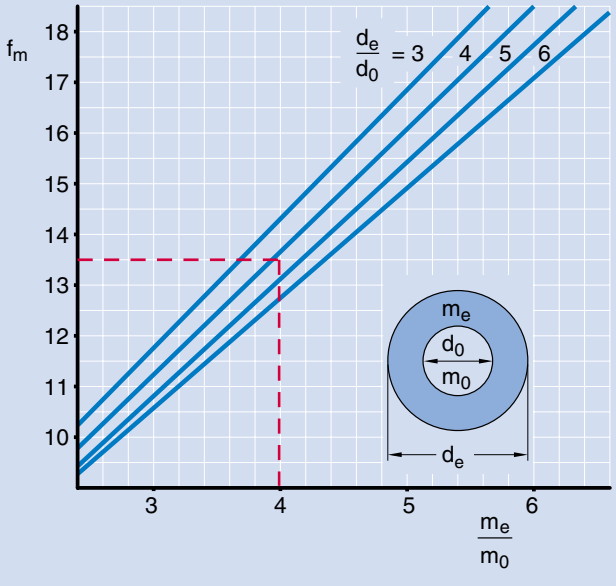

Example

A reel spool with a bearing arrangement according to **fig 3, page 79,** has d_0 = 0,65 m and a mass of 4 200 kg. Maximum paper mass 16 800 kg and then d_e = 2,7 m. Paper speed in the machine is 600 m/min, which means 294 r/min maximum and 71 r/min minimum rotational speed. The support in the machine is such that one bearing at each side takes up the entire load when reeling. During re-reeling the paper speed is 2 000 m/min with maximum 980 r/min and minimum 236 r/min rotational speed and then all four bearings share the load equally. What bearing life can be expected for the most heavily loaded bearing? Explorer spherical roller bearings 23030 CC(K)/W33, with a basic dynamic load rating C = 510 000 N, are selected.

$$\frac{m_e}{m_0} = \frac{16\,800}{4\,200} = 4$$

$$\frac{d_e}{d_0} = \frac{2{,}7}{0{,}65} = 4{,}2$$

According to **diagram 2** f_m = 13,5.

a. When reeling, the maximum bearing load is the same as the journal load

$$F_{m1} = K_m = f_m\, m_0 = 13{,}5 \times 4\,200$$

$$= 56\,700 \text{ N}$$

b. When re-reeling, the journal load is shared equally by the two bearings

$$F_{m2} = \frac{K_m}{2} = \frac{56\,700}{2} = 28\,350 \text{ N}$$

The constant mean load is

$$F_m = \sqrt[3]{\frac{56\,700^3 + 28\,350^3}{2}} = 46\,800 \text{ N}$$

Since $P = F_m$

$$L_{10} = \left(\frac{510\,000}{46\,800}\right)^{10/3}$$

$$= 2\,868 \text{ million revolutions}$$

c. When reeling n_0 = 294 r/min and with **diagram 1**

$$n_{m1} = 0{,}52 \times 294 = 153 \text{ r/min}$$

$$L_{10h1} = \frac{1\,000\,000}{60 \times 153} \times 2\,868 = 312\,400 \text{ h}$$

d. When re-reeling n_0 = 980 r/min

$$n_{m2} = 0{,}52 \times 980 = 510 \text{ r/min}$$

$$L_{10h2} = \frac{1\,000\,000}{60 \times 510} \times 2\,868 = 93\,700 \text{ h}$$

The total basic rating life L_{10h} is thus 1/2 (312 400 + 93 700) = 203 050 h for a complete operating cycle, which is more than enough. The total operating time for one roll of paper is in this case timed as 83,33 + 25,55 = 108,88 min. This corresponds during the basic rating life period to

$$\frac{203\,050 \times 60}{109} = 111\,770 \text{ reels of paper}$$

Lubrication
The bearing arrangements for reel spools are usually lubricated with the same grease as that used for the forming and press section. Relubrication should be carried out about once a month. For further information see the “Lubrication” chapter, **pages 83–103**.



7 Lubrication

Why lubricate? 83

General notes on lubrication 86

Grease lubrication 91

Oil lubrication 95

Cleanliness control 98

Lubrication

This part of the handbook provides lubrication guidelines for almost all the bearing positions in the paper machine. By following these guidelines the user should be able to reduce many common bearing failures related to lubrication.

Why lubricate?

Lubrication in earlier times

Lubricants are products that pre-date the industrial age. They have been used in one form or another for several thousand years, to fight friction or for as long as man has needed to move bulky objects.

The first great civilisation evolved in the Middle East some six thousand years ago. Trade, construction and war necessitated the transport of heavy goods, but it was not always an easy matter.

An Egyptian illustration from some four thousand years ago demonstrates the point.

What was in the jar, shown in **fig 1**? It could have been water that lubricated the runners of the stone sledge as it was pulled along a roadway of clay or Nile mud.

It was also in Egypt, where an ingenious man is said to have discovered that, when he stuffed animal fat between the axle and the wheel hub, the cart moved much more easily and wear was also reduced.

Olive oil was the general-purpose fat of the Mediterranean peoples. They also used it when they needed a lubricant. Analyses of remains show that the lubricating "grease" used by the ancient Egyptians consisted of olive oil mixed with lime.

Mineral oil was also known in very early times but it was not used for lubrication. The Indians employed oil in medicines and to make their canoes watertight.

The story of lubrication began with these modest experiments using nature's various products, but it was not until the 19th century that the fight against friction really got into its stride.

1859 is the year usually stated for the birth of the oil industry. It was then that the first oil well was drilled in Pennsylvania, USA.

Oil films

Lubrication plays a major role in rolling bearing performance. The main task of the lubricant is to build up an oil film between the rolling elements and the raceways. The oil film should be thick enough to separate these mating surfaces completely.

Sometimes the question is asked whether the radial internal clearance in the bearing can be too small to allow an oil film to form. This is not the case, even bearings with zero clearance can build up an oil film. For example an average oil film has a thickness of only 0,3 µm. By way of comparison, a sheet of printing paper has a thickness equal to about 200 oil films.

The film thickness in a rolling bearing is dictated by the bearing size, the operating speed and the viscosity at operating temperature of the oil used. The higher the speed, the thicker is the oil film. Three different terms are used to describe the lubrication conditions: full, mixed or boundary lubrication (➔ **fig 2**).

Fig 1

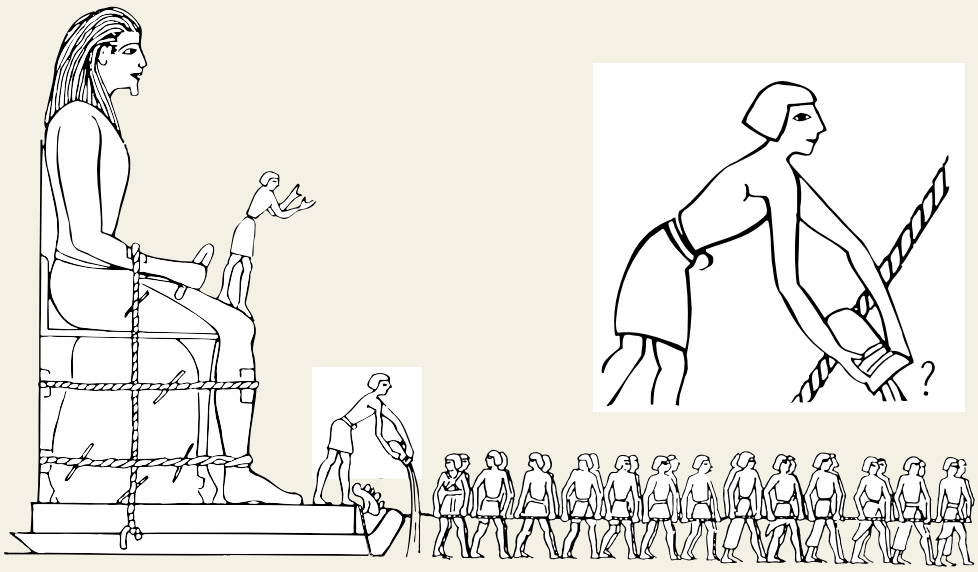

Early use of lubricants

Lubrication conditions

Fig 2

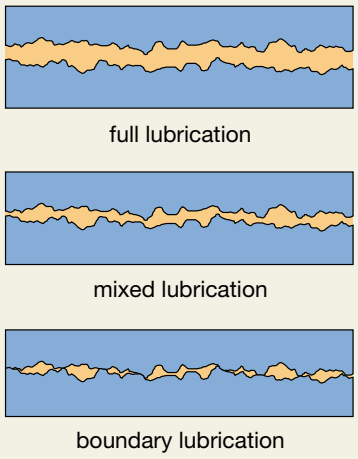

The bearings for high-speed suction rolls are an example of paper machine bearings with full lubrication. Unfortunately, there are also some disadvantages with increased speed. One is the risk of sliding between the rolling elements and the raceways. If the sliding speed of rolling elements is too high in relation to the rolling speed, the oil film can be broken. This normally leads to serious damage to the bearing. In such cases NoWear™ bearings can solve the problem (➔ **page 26**)

Felt roll bearings in the dryer section are examples of bearings with mixed lubrication. These bearings do not suffer much lubrication-related damage because the lubrication conditions are still relatively good and the speed is moderate.

The bearings for drying cylinders without insulation are examples of bearings with boundary lubrication. Whether insufficient lubrication in this case leads to serious damage or to just mild wear and running-in of the surfaces depends on the actual operating conditions.

General notes on lubrication

Basic terms

When selecting suitable lubrication for rolling bearings there are some basic terms that need to be known.

Kinematic viscosity ν

The kinematic viscosity ν describes the resistance to flow of the oil at a certain temperature. Low values mean that the oil flows easily, high values that the oil flows sluggishly. The unit for viscosity is mm^2/s (previously known as Centistoke).

Table 1 lists the ISO classification of oils used in paper machines. The four classes in bold text are commonly used for circulating oil systems.

Table 1

Viscosity classes according to ISO	Kinematic viscosity mm^2/s at 40 °C (104 °F) min	mean	max
ISO VG 68	61,2	68	74,8
ISO VG 100	90,0	100	110
ISO VG 150	**135**	**150**	**165**
ISO VG 220	**198**	**220**	**242**
ISO VG 320	**288**	**320**	**352**
ISO VG 460	**414**	**460**	**506**
ISO VG 680	612	680	748
ISO VG 1 000	900	1 000	1 100
ISO VG 1 500	1 350	1 500	1 650

Viscosity class according to ISO standards

κ value

κ is a viscosity ratio which shows the relation between the operating viscosity of the oil ν and the required viscosity ν_1 both at operating temperature, i.e.

$$\kappa = \frac{\nu}{\nu_1}$$

Diagram 1 is used to determine ν_1. When ν_1 is known **diagram 2** is used to select an oil that gives the required viscosity at the operating temperature. $\kappa = 1$ is intended for general applications and there are special recommendations for paper machine bearings (➔ **pages 207–208**).

Example: A bearing 23130 CCK/C4W33 ($d = 150$ mm, $d_m = 200$ mm) running at 700 r/min needs a viscosity of 13 mm^2/s at working temperature (➔ **diagram 1**). If the bearing runs at 90 °C and selecting an oil with a viscosity of 220 mm^2/s at 40 °C, the obtained κ value is 2 (➔ **diagram 2**).

Viscosity index (VI)

The viscosity of an oil changes with the temperature. The viscosity index is a way to describe the magnitude of the change for a specific oil. Synthetic oils normally have a much higher viscosity index than mineral oils, i.e. their temperature dependence is less.

Diagram 2 is used when the viscosity at the operating temperature is converted into the reference viscosity at 40 °C. Tests at SKF show that the oil film thickness at 100 °C, i.e. at the "normal" bearing temperature in the dryer section, is the same for both mineral and synthetic oils if both have the same viscosity at 40 °C. Therefore, the diagram can be used for both mineral and synthetic oils. It is based on the viscosity index VI = 85. However, at temperatures above approximately 130 °C the advantage of the high viscosity index of synthetic oils is significant and should therefore be taken into consideration.

Bearing life factors a_{23} and a_{SKF}

When the κ value is known **diagram 3** can be used to find out the value of the

ν_1 diagram with an example

Diagram 1

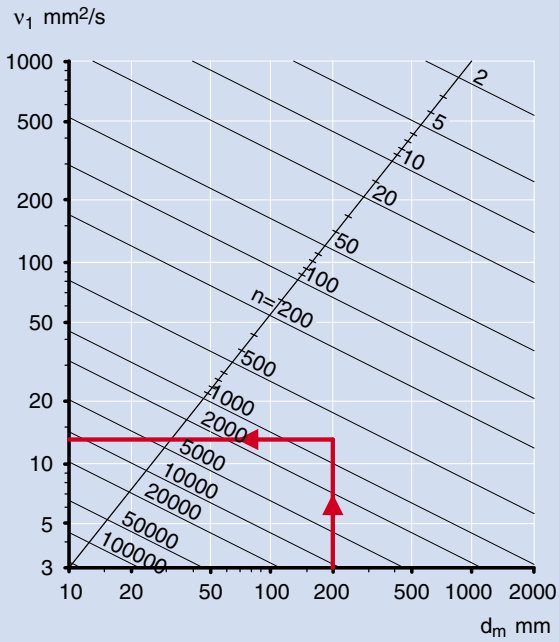

Diagram 3

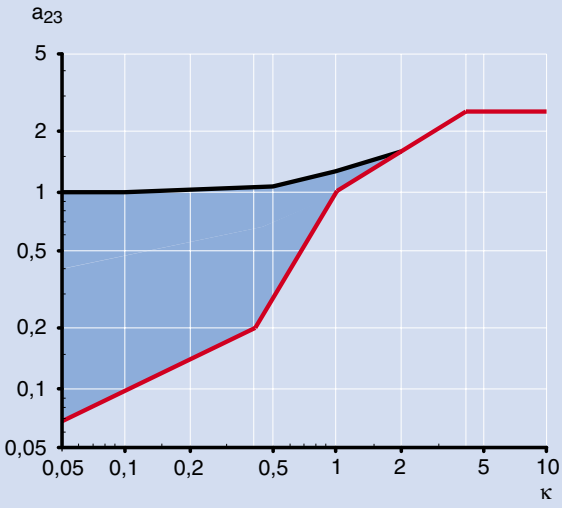

Diagram for bearing life adjustment factor a_{23}

a_{23} factor. Bearing life adjustment factor a_{23} will either increase or decrease the calculated bearing life (except when $\kappa = 1$).

This diagram can be used for all common paper machine lubricants with EP or AW additives provided the additives are not aggressive to steel, see remarks in section "Different types of additives", **pages 88–89**. Higher values may be obtained (shaded area) if lubricants containing additives of the EP or AW type are used, the water content is below 200 ppm and the contamination level low.

In the SKF Life Method the life factor a_{23} is replaced by a life adjustment factor, called a_{SKF}. The advantage with this factor is that it takes both the viscosity ratio κ and the lubricant cleanliness into account. The cleanliness in this case means the representative particle concentration in the lubricating oil during continuous operation (**→ page 12**).

The number of "clean" lubrication systems is increasing every year as more efficient filters are introduced. However, continuous monitoring of the cleanliness is still uncommon.

When dimensioning the bearing arrangements for paper machines SKF recommends the use of the SKF Life Method (a_{SKF}).

For further information see "Selection of bearing size", **pages 10–12**.

Viscosity/temperature diagram with an example of κ calculation

Diagram 2

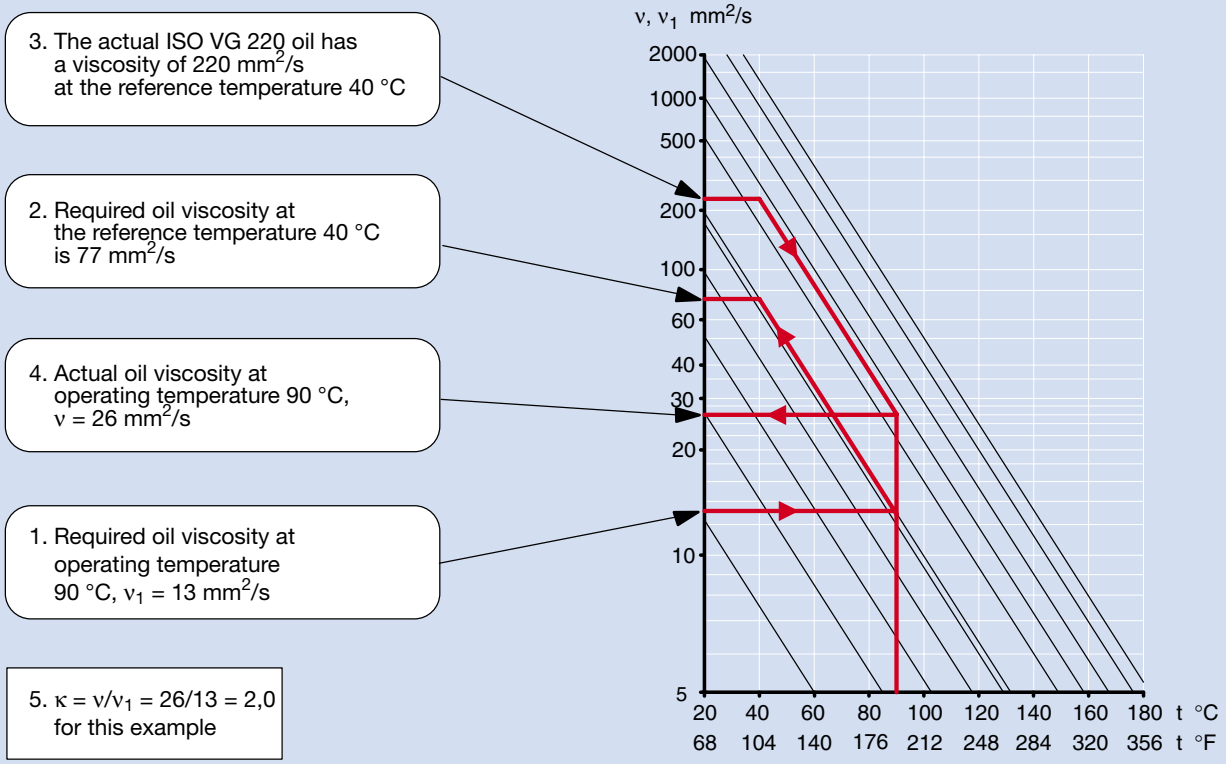

Different types of additives

Production of all different lubricating oils begins with a straight base oil, i.e. an oil without any additives. The difference between hydraulic, gear, engine and paper machine oils is the additive package, i.e. the combination of different additives. Gear oils, for example, may very well be used in paper machines if the additive package is suitable.

The function of additives is an area of very intensive development. New products are presented as replacements for products found to be toxic. For example, the use of products containing lead and also chlorine is prohibited in most countries. Explanations are given below of the functions of some common additives in paper machine oils.

Anti-corrosion

There are in principle two types of additives which offer protection. They are either water-soluble or oil-soluble chemicals, e.g. sodium nitrite. Such additives normally give sufficient protection in damp operating conditions. However, they cannot give complete rust protection if the water content in the lubricant is too high. This is perhaps the biggest problem for the bearings in the forming and press section.

Anti-foam

The foam-damping action can be obtained, for example, by adding small quantities of silicone fluid. Such additives cause the bubbles to burst when they come in contact with the surface of the oil in the reservoir. Air in the oil gives shorter oil and bearing life.

Anti-oxidant

Oil exposed to high temperatures and contact with air oxidises, i.e. chemical compounds are formed. These compounds can increase the viscosity of the oil and also cause corrosion. Viscosity increase is normally used as one criterion for oil change, because these oxidation compounds have a negative influence on the lubrication effect. Anti-oxidants improve the oxidation stability of the oil by 10 to 150 times. The performance of the oil is maintained longer, which also means that the cost of the oil will decrease because it will last longer. Furthermore, these additives have an anti-corrosive effect but it is relatively limited.

Lubricant test



EP (extreme pressure)
If the oil film in the rolling contact is not thick enough to fully separate the surfaces, there will be an interaction between the mating surfaces causing very high local temperatures. The temperature can be so high in these hot spots that asperities are welded together. This creates high friction and heavy adhesive wear like smeared surfaces in the bearing (→ **pages 204 –205**).

EP additives cause a chemical reaction in any hot spots so that the asperities shear off instead of being welded together. The result is a smoothing effect which reduces the size of surface irregularities. As the calculated κ value is based on the surface finish of the raceways before the bearing has been in operation, this smoothing effect will lead to an increase in κ value in operation when lubricants with good EP additives are used. After some time the surfaces should be fully separated by the oil film.

Many common modern EP additives are of the sulphur/phosphorus type. These additives, tend to be aggressive to bearing steel at elevated temperatures and therefore reduce bearing life. As such, SKF generally recommends that lubricants with EP additives should not be used for bearings with operating temperatures above 80 °C. Of course, this can be discussed with your oil supplier.

In lightly loaded bearings where the rollers have a risk of extensive sliding during operation, EP additives normally do not work. For these applications we recommend NoWear™ bearings with coated rollers (L5DA) (→ **page 26**).

AW (anti-wear)
At temperatures above 80 °C where EP additives should not be used, we recommend AW additives to reduce the risk of wear and smearing in the bearing. Additives of the AW type form a surface layer with certain beneficial properties such as a stronger adhesion to the surfaces. This surface layer causes the asperities of the mating surfaces to slide over each other instead of shearing off.

Also EP additives are sometimes called wear-prevention additives, because they prevent adhesive wear. This is perhaps why some markets do not distinguish between AW and EP additives. Both of them are called EP.

Detergent
These additives may be described as “cleaning” additives. They work in such a way that reaction products from high-temperature zones are kept floating in the oil. Without these additives such reaction products may adhere to and discolour the surfaces in contact with the oil. These additives are normally used in engine oils for cars but sometimes feature in paper machine oils as well.

Dispersant
One way to avoid sedimentation of contaminant particles inside the long pipes and large reservoirs of paper-machine lubrication systems is to use an oil with dispersant additives. These additives can keep the particles floating in the oil until they enter the oil filter. One drawback of these additives is that they can keep small drops of water floating as well. This may cause corrosion in the bearings and clogging of the oil filters. Another drawback is that these additives can neutralise the effect of anti-wear additives.

VI-improvement
These viscosity index (and sometimes viscosity) increasing additives are often made up of large-molecule polymers. Experience with high-viscosity oils shows that these additives can be sheared to smaller molecules, i.e. the viscosity of the oil will decrease. If that happens the thickness of the oil film in the bearings will also decrease. Therefore additives of this type are not recommended for paper machine oils. These additives are very common in engine oils for cars, but paper machine oils must have a much longer service life without any change of basic properties like viscosity.

These additives may influence the filterability of the oil.



Grease or oil lubrication

Whether a rolling bearing is to be lubricated with grease or oil depends on a number of factors.

Grease has the advantage over oil of being easier to retain inside the bearing housing. It can also be retained in the sealing labyrinths where it protects the bearing against damp and impurities. A disadvantage when relubricating with large amounts of grease is that the used grease must come out through the labyrinths. This may cause contamination of the wire and the paper web.

Oil lubrication is used when the operating temperature with grease lubrication (due to high speed and/or heating) would be too high. A common maximum operating temperature for medium temperature greases in the forming and press section is 75 °C and for high-temperature greases in the dryer section 120 °C.

However, SKF recommends circulating oil for all bearings in the dryer section, to enable cooling and cleaning of the oil. Unfortunately circulating oil lubrication is not possible for all the bearing positions, e.g. rope pulleys, spreader rolls, doctors and steam joints. Grease is used for all these positions. In old machines the felt rolls are grease lubricated too.

To select an appropriate lubricant it is necessary to know the operating temperature of the bearing. The temperature can either be calculated by SKF with the help of computer programs or by measuring in the machine.

Grease lubrication

Grease lubrication system

Traditionally, most of the forming and press section bearings, as well as rope pulley and doctor bearings in the dryer section have been grease lubricated. There are a number of reasons for this but, today the main consideration is cost. SKF does not recommend grease lubrication in the dryer section. For the rope pulley, doctor and spreader roll bearings where it is very difficult to apply oil lubrication, grease lubrication is used as a compromise.

Previously, when production speeds were low, relubrication was carried out manually during maintenance stops i.e. once or twice per month. More frequent relubrication is necessary today due to increasing speeds, high-pressure cleaning of the machine and increased demand for machine reliability.

Therefore, the use of automatic lubrication is becoming increasingly popular. Automatic lubrication systems consist of a number of components (→ **fig** 3).

The aim with both automatic and manual lubrication is to supply the right amount of fresh grease to the bearing arrangement.

Examples of disadvantages with grease lubrication are the difficulties in selecting grease quality, initial charge, relubrication quantity and method of grease supply into the bearing.

Automatic grease lubrication

Fig 3

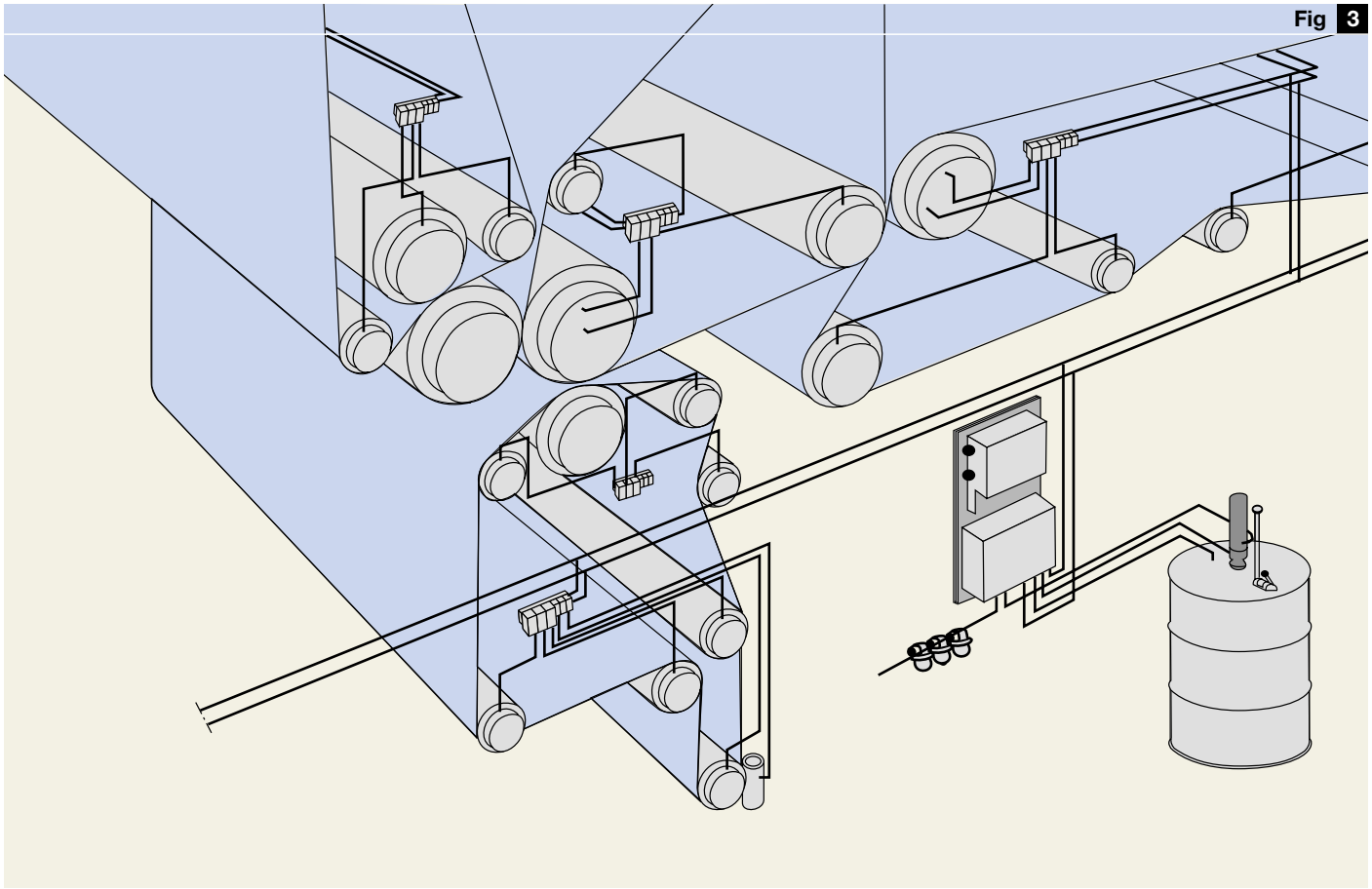

Selection of grease type

Lubricating grease is made up of a so-called base fluid which is mixed with a thickener. The base fluid is normally either a mineral or a synthetic oil, often referred to as the base oil.

The thickener in the majority of cases is a metal soap, e.g. calcium, lithium, sodium, or non-soap, e.g. clay (bentonite), silica gel, polyurea. The consistency of the grease depends on the type and quantity of the thickener used. The consistency is measured as the penetration depth of a standardised cone into the grease during a certain time. **Table 2** shows three consistency classes according to NLGI (National Lubricating Grease Institute), which are used for bearing applications.

When selecting greases for paper machines it is necessary to take all operating conditions into consideration. Unfortunately, there has been a trend, mainly in response to end-user requirements, to minimize the number of different greases. That may lead to an unsatisfactory compromise. For example, it may be hard to find a grease that has all the properties required for both the forming and press section as well as the dryer section.

SKF lubricating grease range

With the improvements in bearing lubrication technology, higher operating speed and temperatures the demands made on lubricating greases have become more severe. SKF, in conjunction with major grease manufacturers, has developed a range of lubricating greases to satisfy these demands.

The most common greases used in paper machines are the medium temperature grease LGEP 2 and the high temperature grease LGHB 2.

Detailed information concerning these greases and all other products can be obtained from your local SKF company.

Greases for the forming and press section

The SKF experience is that a grease suitable for lubricating the rolling bearings in the forming and press section should have the following basic properties:

Table 2 *Consistency classes*

NLGI index	Penetration mm/10
1	310–340 (very soft)
2	265–295 (soft)
3	222–250 (medium hard)

- Good lubrication function up to 75 °C
- Consistency, NLGI 2
- Base oil viscosity, min. 175 mm^2/s at 40 °C
- Excellent corrosion protection
- Good water washout resistance

Recommendation: SKF LGEP 2.

Greases for the dryer section

SKF experience is that some of the so-called high-temperature greases with a minimum base oil viscosity of 400 mm^2/s have shown adequate lubrication performance in the dryer section.

A grease suitable for lubricating rolling bearings in the dryer section should have the following basic properties:

- Good lubrication function up to 120 °C
- Consistency, NLGI 2
- Base oil viscosity, min. 400 mm^2/s at 40 °C
- Good oil bleeding
- Long service life

Recommendation: SKF LGHB 2.

Grease quantity at installation

In general, during the initial mounting, the bearing should be completely filled with fresh clean grease. Furthermore, 30 to 50 % of the free space in the housing should be filled with grease.

In addition, to ensure sealing efficiency, the labyrinth seals should be completely filled with grease from the beginning.

Relubrication

There are some important issues to consider when relubricating. One basic rule is to use the same grease quality for relubrication as was previously used when the bearing was mounted.

Another important point to consider is the method of relubrication. In most cases, there is a need of regular relubrication. Therefore the housing must be supplied with a lubricant duct and grease nipple. For the fresh grease to penetrate effectively into the interior of the bearing, and for the old grease to be pushed away, the duct should open so that the grease is supplied immediately adjacent to the outer ring face or direct into the lubrication groove (W33 feature).

The bearing housings in most paper machine applications with grease lubrication, are provided only with labyrinth seals. These labyrinths have to be filled with grease to obtain an efficient sealing function. Therefore, the recommended relubrication intervals and quantities are selected to secure both good lubrication and efficient sealing function.

The grease in the labyrinths can easily be washed out, if the housings are hosed down under high pressure. Therefore, never direct the high-pressure spray nozzle towards the sealing gap. The housing sealing should be protected e.g. with splash covers (➔ **fig 8, page 33**).

Sometimes extra relubrication is carried out during a standstill in order to push the water-contaminated grease out from the labyrinth. This extra relubrication should instead be carried out under operating conditions just before standstill. More details are given under the heading “Standstill precautions” (➔ **page 196**).



Manual lubrication

Table 3

Forming and press section
Once a week is recommended for bearings in wet positions, as in the wire and press parts.
Once a month is recommended for bearings in damp positions, e.g. calenders, reelers, winders.

Quantities according to

$G = k\ D\ B$

where
G = quantity of grease, g
D = bearing outside diameter, mm
B = bearing width, mm
k = 0,002 (weekly relubrication)
0,003 (monthly relubrication)

Dryer section
Manual grease lubrication is not to be recommended in the dryer section because of the difficulty in reaching all the positions during operation.

Automatic lubrication

Table 4

Forming and press section
Automatic grease lubrication systems are becoming increasingly common, The advantage with these systems is better protection of the bearing because of shorter relubrication intervals.
Quantities according to the equation below are valid for bearings in the wire and press sections.

$G = 0{,}00001\ H\ D\ B$

where
G = grease quantity after H hours, g
D = bearing outside diameter, mm
B = bearing width, mm
H = relubrication interval, hours

Dryer section
SKF normally recommends oil lubrication for the bearings in the dryer section. However, there are some positions where circulating oil is difficult to apply. For these positions SKF recommends a high-temperature grease with the same quantities as above.

Relubrication intervals and quantities
As the bearing arrangements in the forming and press section of the paper machines have a “wet” environment, there is a need for shorter relubrication intervals than those indicated in the SKF General Catalogue.

There are basically three factors to consider when selecting relubrication intervals and quantities. These are the lubrication and sealing functions and the grease leakage from the housing.

From a lubrication point of view, the amount of grease in the bearing should be just sufficient to supply an adequate quantity of base oil to the raceways, rollers and cages.

From a sealing point of view, it is important that the labyrinth seals are always completely filled with grease.

From a leakage point of view, the grease quantity should not be too large. Large quantities of grease generate heat in the bearing, especially at high speeds, when the bearing attempts to pump out most of the grease. When relubrication has been carried out a number of times all the free space inside the housing can be filled with grease. From then on, the grease leakage will be equal to the relubrication quantity. Therefore, with large regreasing quantities, there is a risk that the leakage is so great that some grease may come out on the wire.

As the environment and the bearing housing design vary widely from machine to machine, the relubrication quantities should always be adjusted according to practical experience. Thus, the recommended values for relubrication intervals and quantities listed in **tables** 3 and 4 should be used as guidelines only.

Oil lubrication

Oil lubrication systems

Most of the bearings in old machines were grease lubricated. Originally, only the bearings for drying cylinders had oil lubrication. These first oil lubrication systems were of the oil bath type.

Increased operating speeds and steam temperatures soon made improved lubrication necessary. The higher the operating temperature of the bearing, the more rapidly the lubricating oil will degrade.

The next step in improved lubrication was the introduction of oil drip lubrication. With this method it was possible to extend the life of the oil. However, the continuous increase in paper speeds and steam temperatures and the introduction of hooded dryer sections very soon resulted in bearing operating conditions that required even better lubrication. This was obtained by introducing circulating oil lubrication.

Modern circulation systems make it possible to cool and clean the oil (➔ **fig** 4). These are the main reasons why circulating oil lubrication is used for most bearings in new machines.

Over the years, the speed increase has been so great that other parts of the machine also have to be lubricated with circulating oil. Note that the speed rating in the SKF General Catalogue is not the maximum permissible speed for the bearing. With oil circulation it is possible to operate at higher speeds. Some bearings in modern high-speed machines operate at double the speed rating.

Modern paper machines are often very large and the bearing operating conditions differ in the various parts of the machine. Therefore the bearing lubrication system is split up into several smaller systems. For example, the forming and dryer sections usually have their own lubrication systems, as do the Yankee cylinders and deflection-compensating rolls (➔ **fig** 5**, page 96**).

Fig 4

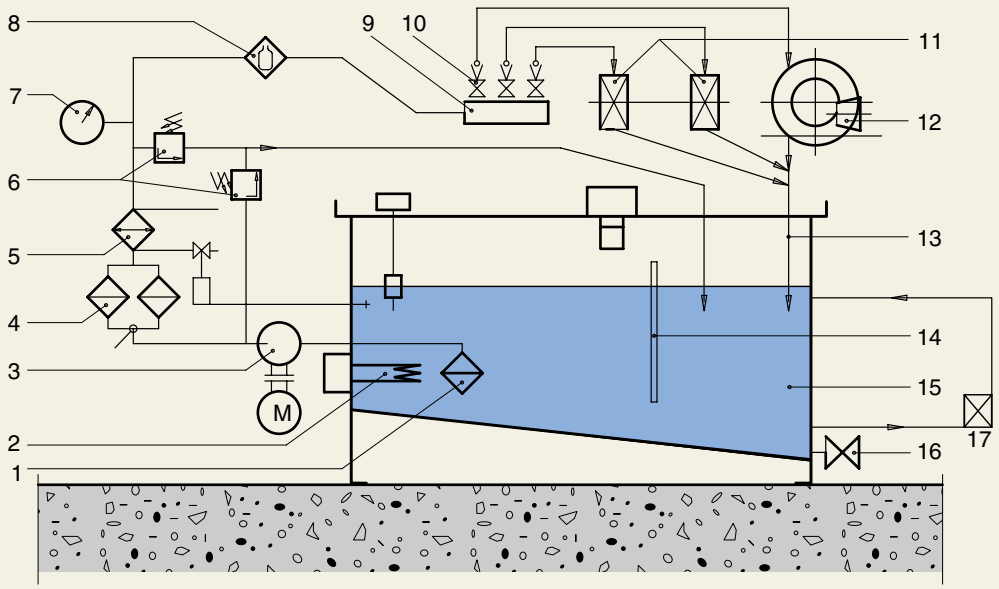

Basic layout of a circulating oil lubrication system for a paper machine

1. Suction tube filter
2. Heater
3. Pump (with motor)
4. Duplex filter
5. Cooler (with thermostat)
6. Pressure control valve
7. Thermometer
8. Oil sampler
9. Flow control
10. Flow indicator
11. Rolling bearings
12. Speed reducers
13. Return tube
14. Intermediate wall
15. Reservoir
16. Drain
17. Water extractor

Selection of oil quality

When selecting oils for paper machines it is necessary to take into consideration a great number of factors including:

- Lubrication method (oil bath/circulation)
- Operating conditions for all the bearings connected to the same lubrication system
- Design and performance of the seals
- Pipe dimensions

The most common operating conditions usually result in two or three different oils in one machine. This represents a good compromise between the different lubrication requirements and what is practical.

Unfortunately, there has been a trend, mainly in response to end-user requirements, to minimise the number of different oils. That may lead to an unsatisfactory compromise. For example, it may be hard to find an oil that has all the properties required for both the forming and dryer sections.

Mineral oils

In most cases good-quality mineral oils are suitable as lubricants for paper machine bearings at operating temperatures up to 100 °C. However, some mineral oils (developed for paper machines) perform well up to 120 °C.

Synthetic oils

There are a number of different types of synthetic base oils such as synthetic hydrocarbons, esters and polyglycols. These products have different properties regarding their influence on rubber seals, evaporation and miscibility with polar and non-polar additives etc. Another difference is that the density of polyglycols is very close to that of water at 50 °C. This is a disadvantage e.g. the water will not separate in the reservoirs which normally have a temperature of about 50 °C.

Poly-alpha-olefin (PAO) oils (often mixed with small amounts of other synthetic base oils) have been the most popular synthetic oil type in paper machines. This is perhaps due to the fact that these oils do not have the above-mentioned drawbacks.

Synthetic oils have a number of advantages compared with mineral oils. The most appreciated property of synthetic oils is perhaps their better performance at high operating temperatures. Therefore, these oils are often used at operating temperatures above 100 °C, but they can of course be used at lower temperatures as well.

Oils for the forming section

The selection of oil for the forming section should be based on operating conditions for press and suction roll bearings because these are the most demanding positions.

Fig 5

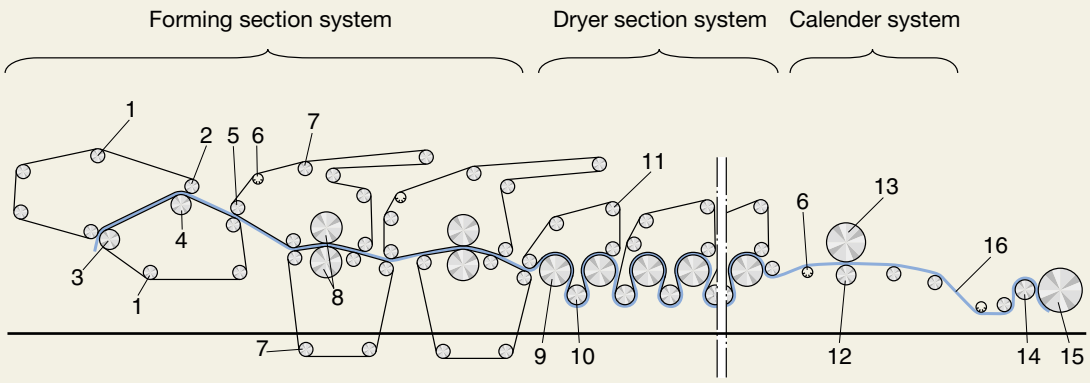

Basic layout of a paper machine including a common division in different oil lubrication systems.
1. Wire roll
2. Forward drive roll
3. Forming roll (suction roll)
4. Suction couch roll
5. Pick-up roll
6. Spreader roll
7. Felt roll
8. Shoe press
9. Drying cylinder
10. Vacuum roll
11. Guide roll (wire roll)
12 Deflection compensating press roll (soft calender)
13. Thermo roll (soft calender)
14. Reel drum
15. Reel spool
16. Paper web

When large bearings with heavy rollers rotate at high speeds the rollers may slide as they enter the loaded zone. The interior surfaces of such bearings may be damaged severely by smearing. That is why these bearings need a thick oil film containing EP additives. If these additives are of the sulphur-phosphorus type, the bearing operating temperature should not exceed 80 °C as such additives act aggressively at higher temperatures. Therefore, the oil flows should be large enough to keep the bearing temperature below 80 °C. Oils with EP additives that are stable at higher temperatures or with AW additives should be used at operating temperatures above 80 °C.

Effective rust-inhibition and rapid water separation are the most important properties of oils for the forming section, but EP additives are also of top priority for high-speed press and suction rolls.

An oil suitable for the forming section should have the following basic properties:

- Viscosity class ISO VG 220 or 320
- EP additives up to 80 °C
- Anti-wear additives above 80 °C
- Rust inhibiting additives

The operational limits for the oil are specified in the section “Cleanliness control” (➔ **pages 98–102**).

Oils for the dryer section and machine calenders

The selection of oil for the dryer section should be based on operating conditions for drying and Yankee cylinder bearings because these are the most demanding positions.

EP or AW additives are also recommended for oils in the dryer section because the high bearing operating temperatures in combination with the viscosity of commonly used oils leads to metal-to-metal contact between rollers and raceways. If the EP additives are of the sulphur-phosphorus type the bearing operating temperature should not exceed 80 °C as these additives act aggressively at higher temperatures. Oils with EP additives that are stable at higher temperatures or with AW additives should be used at operating temperatures above 80 °C.

Good thermal and chemical stability are the most important properties of oils for the dryer section and machine calenders. Effective rust inhibition is desirable here as well.

An oil suitable for the dryer section should have the following basic properties:

- Viscosity classes:
  ISO VG 220 to 320 for drying cylinders etc.
  ISO VG 320 to 460 for Yankee cylinders
  ISO VG 460 to 1500 for oil baths
- EP additives up to 80 °C
- AW additives above 80 °C
- Rust inhibiting additives

The operational limits for the oil are specified in the section “Cleanliness control” (➔ **pages 98–102**).

Oils for off-line calenders

Off-line calenders are often made up of ordinary press rolls. Therefore, the requirements for calender oils are the same as for forming section oils if the bearing operating temperature is below 80 °C. However, in some off-line calenders, bearings are operating at the same temperatures as dryer section bearings. In these cases the oils should fulfil the requirements for dryer section oils.

Calender development is very rapid. Heating oil in so-called hot calenders may have temperatures up to 350 °C. Special oils and lubrication systems are required if the temperatures of the press roll bearings in these hot calenders is much higher than those of the bearings in the dryer section.

The operational limits for the oil are specified in the section “Cleanliness control” (➔ **pages 98–102**).

Cleanliness control

Lubricating oil should be continuously cleaned of impurities. It is important to remove both water and solid particles from the oil.

Cleanliness recommendation
When selecting suitable water extractors and filters the following cleanliness guidelines should be aimed for:

a) Water content should be below 200 ppm.
b) Particle content should be according to ISO 4406 cleanliness class –/15/12 (using a microscope) or 18/15/12 (using automatic particle counter) or SAE class 6B/6C, or better.

Water extractors
As mentioned earlier, SKF has found water to be one of the major reasons for short service live of bearings. The recommendation for water content to be below 200 ppm gives a good balance between the cost of water removal and increased bearing service life.

The recommended water content level can easily be obtained by using ordinary extractors available on the market. The most common extractors work according to two basic principles, using vacuum or centrifugal forces. The advantage of the centrifugal extractors is that they normally remove more water per minute than the vacuum extractors. On the other hand, vacuum extractors have the advantage that they take air out as well.

The final result of water removal depends very much on the amount of water entering the system. Therefore, the main question when selecting equipment is the estimation of the risk of water entering into the lubrication system. The most common reasons for the entry of water are inefficient housing sealings and high-pressure cleaning, but accidental leakage from oil coolers etc. has to be considered as well.

The bearings should never be exposed to oil that has higher water content than that recommended. This is especially important during standstill. If this does happen there is a great risk that the free water in the oil can start the corrosion process. Therefore, it is very important to keep water content low just before machine stoppages and to prevent entry of water during standstill.

Other causes of high water content in modern paper machine oils are so-called dispersant additives. The main task of these additives is to keep all contaminant particles floating in the oil until they enter the oil filters. Unfortunately, these additives sometimes have the same effect on water molecules. This is one of the reasons for the clogging of oil filters. In such cases the continuous use of a water extractor is required.

From the bearing point of view, all oil lubrication systems should have equipment for continuous water removal. Without such equipment many paper machine oils may have water content higher than the recommended 200 ppm.

Oil filters
Different types of oil filters have been used for many years in the lubrication systems of paper machines. The first replaceable filters were so-called mesh elements made of woven steel wire. These filters were efficient when it came to very large particles but research at SKF has proved that even particles smaller than 10 µm should be removed from the oil because they may have a detrimental effect on bearing surfaces.

Normally there is a connection between fine filters and clean oil.

However, the most important thing is to have clean lubricating oil. Therefore, SKF's recommendation is based on oil cleanliness instead of filter ratings, see under "Cleanliness recommendation". This recommendation is based on the optimised filter cost as well as on the bearing service life obtained.

When selecting filters, the filterability of the current oil should also be considered.

Filter ratings
Filters have developed rapidly in recent years. This means that the "standard" filters of today are many times more efficient than the filters commonly used some years ago.

The filter rating should give an indication of the filter efficiency. Unfortunately, in the case of so-called "nominal" filters there is no definition of the efficiency.

Efficiency of the filters is defined as a reduction factor β which is related to one particle size. The higher the β value, the more efficient the filter is for the specified particle size. Therefore both the β value and the specified particle size have to be considered.

The reduction factor β is expressed as the relationship between the number of specified particles before and after the filter. This can be calculated as follows:

$$\beta_x = \frac{n_1}{n_2}$$

where
n_1 = number of particles per volume unit (100 ml) larger than x µm upstream the filter
n_2 = number of particles per volume unit (100 ml) larger than x µm downstream the filter

Note! The β value is connected to only one particle size in µm, which is shown as the index e.g. β_3 , β_6, β_{12}, etc. For example, a complete rating $\beta_6 = 75$ means that only 1 of 75 particles of 6 µm or larger will pass the filter.

Particle counting

Particle counting can be based on various principles.

The simplest is to filter the oil on to a membrane and look at it through an optical microscope. The size of a particle is established by measuring the longest dimension. The particle size distribution can be estimated by comparing the sample membrane with reference membranes of different cleanliness levels. A skilled operator should do this because it is a subjective method.

Automatic Particle Counting (APC analysis) is a method more commonly used. Particles are passed in front of a light source coupled to a sensor. The amount of light passing through a window depends on the size of the particle passing that window. The particle size is derived from its cross-sectional area. Calibration of the equipment is most important. A drawback of using a sensor is the necessity of removing air bubbles, which would otherwise be counted as particles.

Yet another method for particle analysis is Spectro-metric Oil Analysis Program, also called SOAP. This method is very good for the analysis of small particles e.g. from abrasive wear. Wear particles are in most cases smaller than 5 to 10 µm.

There are a number of additional methods and equipment on the market today and new products are launched all the time in this growing field of condition monitoring.

Whatever the method used the results should be presented as a development trend. **Fig** 6 shows how a PC is connected to APC equipment to collect and evaluate the results.

Errors are to be expected if the results of an analysis show that there

Fig 6

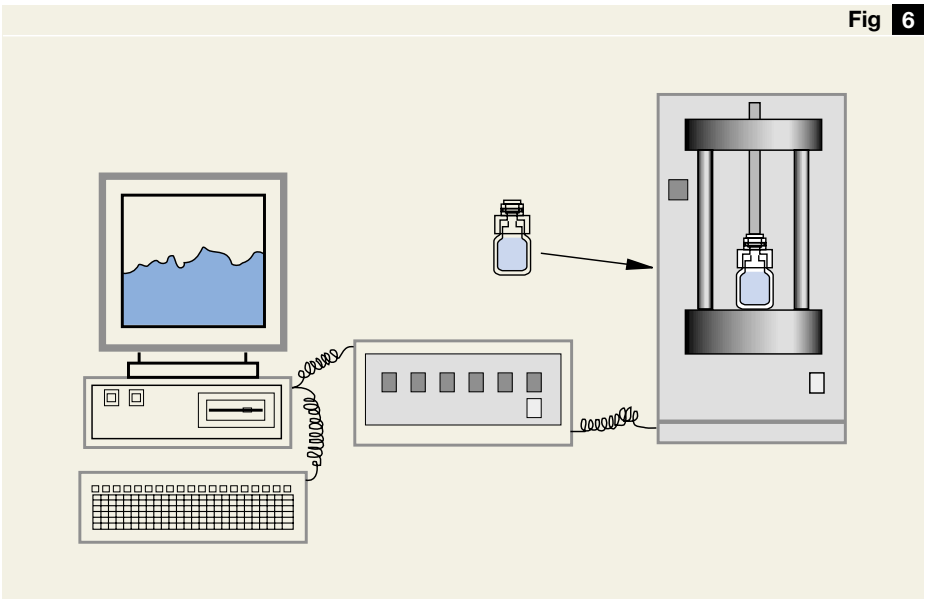

Equipment for particle counting

are very big differences between the different particle size ranges. If there are too many large particles the filter may be damaged or by-passed. Another reason could be that the oil has not been correctly sampled. It may include sediment particles. The presence of too many particles results in a “step” in the distribution curve. This “step” shows the performance limit of the filter.

Contamination levels

Standards establish information as to allow comparison and interpretation of contamination (cleanliness) levels and hence enabling control of particle contamination to ensure system performance and reliability. Standards have been published by ISO, NAS and SAE (both Aerospace Standards).

ISO classification method

The method for coding the contamination level in a lubrication system is according to ISO 4406:1999.

In order to simplify the reporting of particle count data, the quantities counted are converted in a code using scale numbers. These are allocated according to the number of particles counted per millilitre of the fluid sample (➔ **table** 5).

The code for contamination levels using automatic particle counters (APC) comprises three scale numbers relating to the number of particles ≥ 4 µm (c), ≥ 6 µm (c) and ≥ 14 µm (c), where (c) refers to APC. The three numbers are written one after the other separated by oblique strokes (slashes). Example: 18/15/12 (➔ **diagram** 4). APC calibration is according to ISO 11171.

For comparative results, the code for microscope counting comprises two scale numbers relating to the number

ISO 4406 method

ISO classification

Table 5

ISO classification – allocation of scale number

Number of particles per ml oil		
Over	Up to and including	Scale number
2 500 000		>28
1 300 000	2 500 000	28
640 000	1 300 000	27
320 000	640 000	26
160 000	320 000	25
80 000	160 000	24
40 000	80 000	23
20 000	40 000	22
10 000	20 000	21
5 000	10 000	20
2 500	5 000	19
1 300	2 500	18
640	1 300	17
320	640	16
160	320	15
80	160	14
40	80	13
20	40	12
10	20	11
5	10	10
2,5	5	9
1,3	2,5	8
0,64	1,3	7
0,32	0,64	6
0,16	0,32	5
0,08	0,16	4
0,04	0,08	3
0,02	0,04	2
0,01	0,02	1
0,00	0,01	0

Diagram 4

ISO classification and example for both microscope (–/15/12) and automatic particle counter (18/15/12)

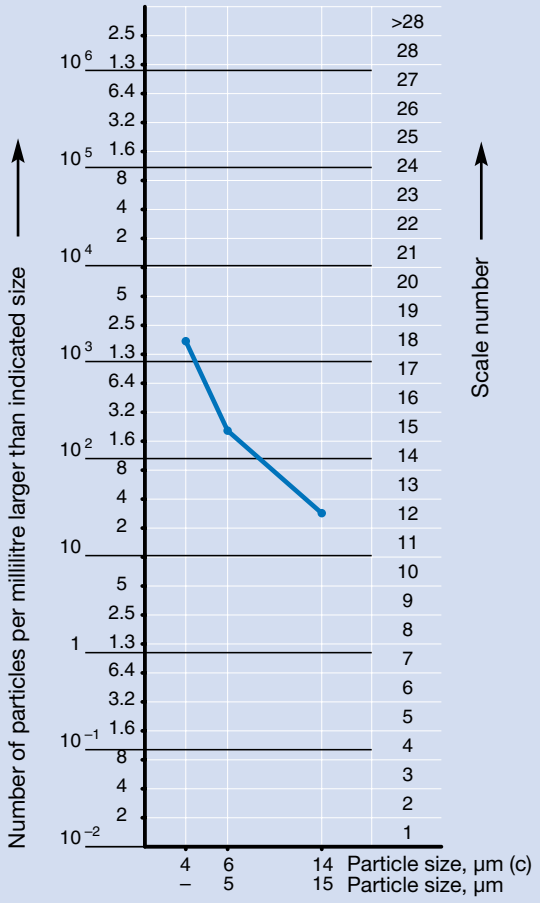

of particles ≥ 5 µm and ≥ 15 µm. Counting is undertaken in accordance with ISO 4407. The code is stated in three part form where the first part is given as a "–". Example: –/15/12 (→ **diagram** 4).

NAS classification method
The NAS classification method is according to NAS 1638. The principal means for its development was to count particles with a microscope (according to ARP598). The strength of the method was the ability to provide more details about the particle distribution by considering five size ranges. NAS 1638 is superseded by SAE AS 4059.

SAE classification method
The classification method is according to SAE AS 4059. The contamination levels selected are an extension to the NAS 1638 levels. However, the SAE standard considers both microscope and automatic particle count.

For reporting, the quantities counted are converted in class codes. These are allocated according to the number of particles counted per 100 millilitre of the fluid sample (→ **table** 6).

The particle distribution considers six size ranges (size code by a letter from A to F) and 15 classes.

The SAE cleanliness levels can be identified in different ways, the most important ones:

- total number of particles larger than a specific size, example: AS 4059 class 6B
- designating a class for each size range, example: AS 4059 class 6B/5C/4D/4E where the figure indicates the class and the letter the side code (→ **table** 6).

Flushing of new circulation systems
If there are hard contaminant particles in the system the bearings can be damaged during the first minutes of operation. The best way to avoid this is to flush the complete lubrication system before the very first start-up. Flushing should be continued until the flushing oil has the recommended cleanliness level. This means that there should be a number of cleanliness tests during the flushing period.

The main difficulty during flushing is creating turbulence in the pipes in order to flush out all the contaminant particles attached to the walls of the pipes. SKF recommends the use of the same oil that will be used during operation. To reduce the viscosity the oil should be heated. The oil pump should give its maximum flow capacity. By doing so, the system is subjected to a higher flushing effect than during subsequent normal operation. In this way the risk of contaminants being dislodged from the pipe walls during normal operation will be minimised.

SAE AS4059, cleanliness levels by particle count

Table 6

Size code			Cleanliness classes (based on maximum number of particles per 100 ml oil)														
(1)	(2)	(3)	000	00	0	1	2	3	4	5	6	7	8	9	10	11	12
A	**>1**	**>4**	195	390	780	1 560	3 120	6 250	12 500	25 000	50 000	100 000	200 000	400 000	800 000	1 600 000	3 200 000
B	**>5**	**>6**	76	152	304	609	1 220	2 430	4 860	9 730	19 500	38 900	77 900	156 000	311 000	623 000	1 250 000
C	**>15**	**>14**	14	27	54	109	217	432	864	1 730	3 460	6 920	13 900	27 700	55 400	111 000	222 000
D	**>25**	**>21**	3	5	10	20	39	76	152	306	612	1 220	2 450	4 900	9 800	19 600	39 200
E	**>50**	**>38**	1	1	2	4	7	13	26	53	106	212	424	848	1 700	3 390	6 780
F	**>100**	**>70**	0	0	0	1	1	2	4	8	16	32	64	128	256	512	1 020

(1): size code (letter)
(2): size, microscope count (ISO 4402 calibration) – particle size based on longest dimension
(3): size, automatic particle count (ISO 11171 calibration or Electron Microscope) – particle size based on projected area equivalent diameter

Oil sampling

The ideal oil sample should be representative, i.e. identical to the lubricant entering the rolling bearing.

Sampling from the pressurised side of the circulating oil system can be done either with a simple ball valve or with more sophisticated equipment. The main requirement is to flush the valve and the sample bottle so much that no additional contamination will enter the oil sample.

When taking oil samples from non-pressurised systems like oil baths and oil reservoirs it is important that the sample is taken at a certain distance above the bottom sedimentation. In these cases some kind of syringe or pump has to be used. The results are not as accurate as those obtained when sampling from pressurised pipes. On the other hand, oil samples from return pipes can be used when analysing the source of the wear particles.

The best way to analyse the cleanliness level of the oil is to install an on-line automatic particle counter. However, all oil lubrication systems should be provided with good sampling points because additional testing of the oil for viscosity, water content, oxidation etc is required. For this purpose some equipment is available on the market, e.g. the sampler shown in **fig** 7. This equipment uses sampling points integrated in the pressurised side of the lubrication system. When the sampler is connected to a sampling point it is easy to flush the sample bottle with the pressurised lubricating oil. This ensures that the oil sample will be representative. There is of course other similar equipment on the market.

Checking water content

Today there are some products on the market for continuous on-line measurements, but the method most widely used is to take an oil sample and carry out a Carl-Fischer analysis. Irrespective of the method, the results are usually presented in ppm, because the actual quantities are very small. Max water content should be 200 ppm.

Checking oil condition

As certain properties change during operation, regular condition checks should be carried out. For example, the degradation of the oil is mainly determined by how often the oil passes through heated areas in the system, like bearings, pumps etc. Contamination also influences the oil “life”. The greater the number of steel particles in the oil, the faster the oxidation of the oil. Suitable oil change intervals can be determined by regular checks of the oil con-

Fig 7

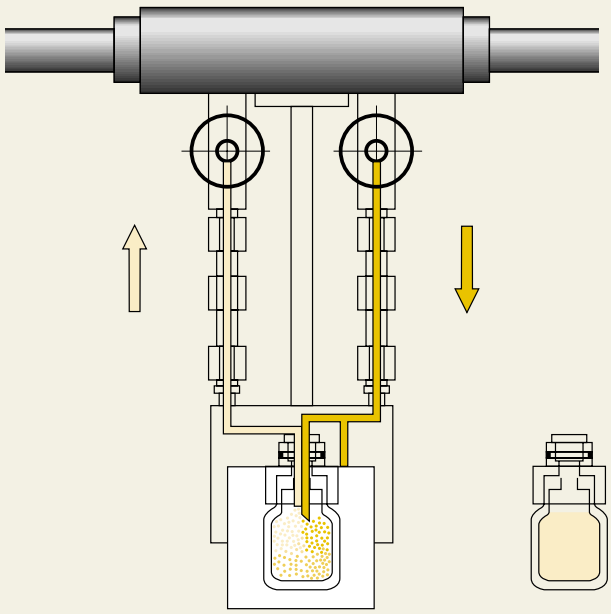

Equipment for oil sampling

dition. Such an analysis should include checking the following properties:

- Viscosity
- Oxidation
- Particle distribution by size
- Microscopic examination of particle type and shape
- Water content
- Loss of additive content

These properties dictate the life of the oil in oil baths, but in circulation systems oil life can be extended by removing particles and water from the oil.

The main advantage of regular checking is the possibility of following up the results of maintenance activities, such as changes of filter elements.

SKF OilCheck monitor TMEH1 is a portable instrument which offers a two minute alternative to lengthy laboratory investigations. The instrument measures the effect of contamination and electrochemical changes that occur in oils. With severe changes from a linear degradation of the oil more sophisticated analysis is recommended. Detailed information about the monitor can be obtained from your local SKF company.

8 Lubrication examples



Lubrication examples

The following examples closely represent the bearing positions referred to in the applications of this handbook. These examples are to be used as general guidelines only and are valid only when the bearing application and operating conditions correspond to those indicated here.

Example 1

Breast, forming and forward drive rolls (grease)

Machine data

Paper qualities	all
Roll position	forming section
Paper speed	100–1 300 m/min (330–4 260 fpm)

Operating conditions for the bearings

Rotational speed	5–45 % of the speed rating
Ambient temperature	35 °C (95 °F)
Lubrication	grease
Base oil viscosity	175 mm^2/s at 40 °C

Lubrication guidelines

SKF experience is that a grease with a base oil viscosity of minimum 175 mm^2/s has good lubrication performance in this position. Rust protection and sealing properties have the highest priority in the forming section.

General guidelines, as outlined under “Grease lubrication” (→ **pages 91–94**), should also be taken into account.

Comments on the diagram

Bearing temperature depends on the bearing speed, applied load and external cooling or heating of the bearing arrangement. Heat transfer from the housing, shaft and the foundation is largely dependent on the bearing application and operating conditions. Therefore, the calculated bearing temperatures in the diagram are valid only when the bearing application and operating conditions are similar to those indicated here.

The calculations for this diagram have been made using an SKF computer program to give the outer ring temperature. The load at each speed corresponds to the minimum recommended bearing life of 120 000 h. The highest bearing temperature shown in the diagram is 75 °C as it is customary to use oil lubrication at higher temperatures.

Bearing application

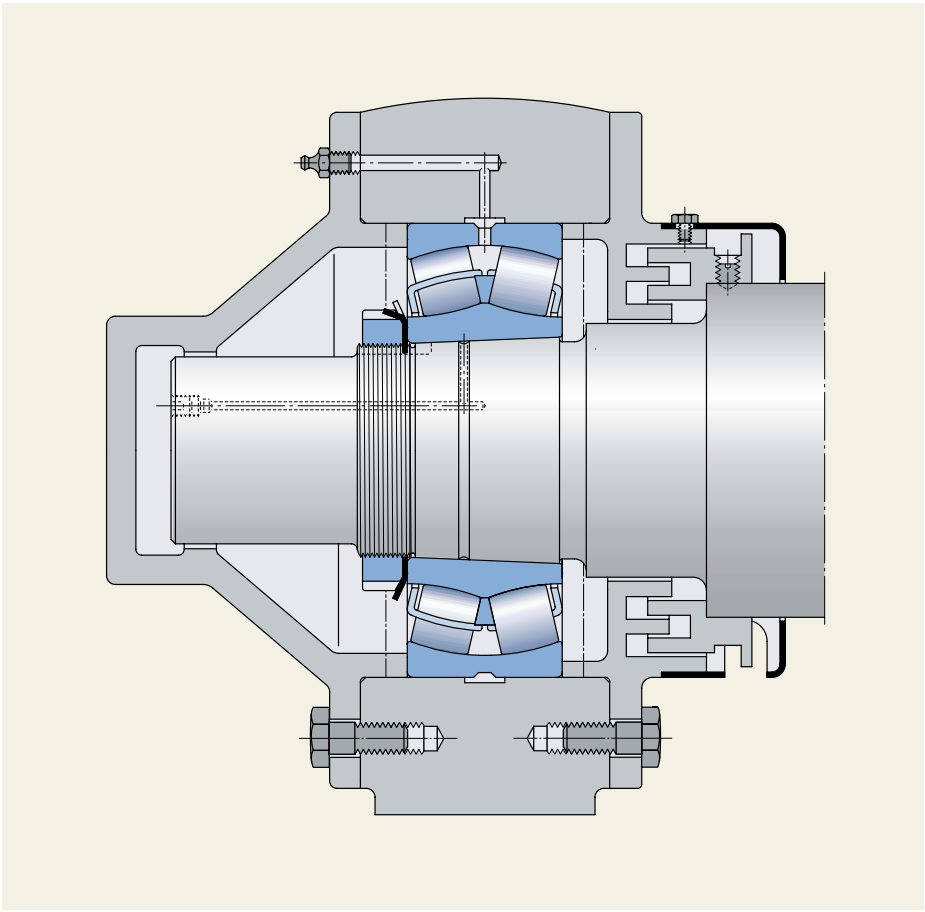

Bearing temperature/speed factor diagram

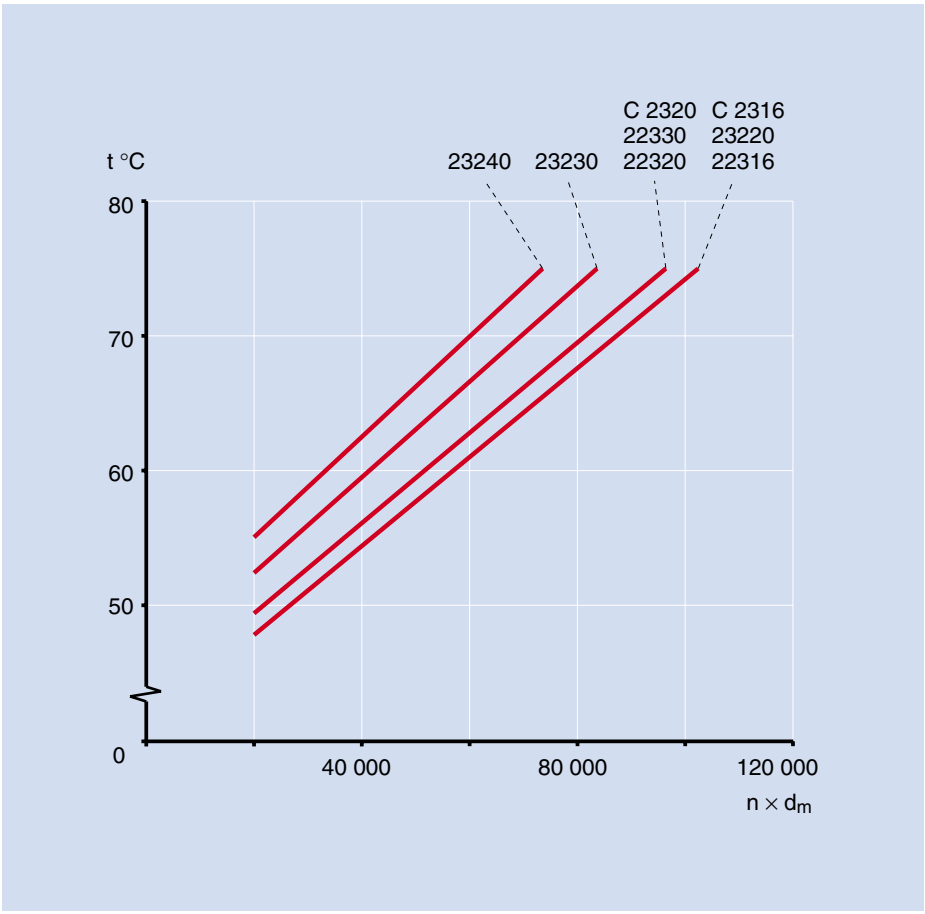

Example 2

Breast, forming and forward drive rolls (oil)

Machine data

Paper qualities	all
Roll position	forming section
Paper speed	700–2 200 m/min (2 300–7 220 fpm)

Operating conditions for the bearings

Rotational speed	25–60 % of the speed rating
Ambient temperature	40 °C (104 °F)
Lubrication	circulating oil
Oil viscosity	ISO VG 220
Oil inlet temperature	45 °C (113 °F)

Lubrication guidelines

Bearings for these rolls are smaller, and have a lower speed factor ($n \times d_m$), than suction roll bearings which are often lubricated with the same oil. Therefore, the lubricant properties should be based on the operating conditions for the suction roll bearings (**➔ example 6**). However, the bearings for the rolls in this example should have an oil flow giving a viscosity ratio κ according to the guidelines on **page 207**.

General guidelines, as outlined under “Oil lubrication” (**➔ pages 95–97**), should also be taken into account.

Comments on the diagram

Bearing temperature depends on the bearing speed, applied load and external cooling or heating of the bearing arrangement. Heat transfer from the housing, shaft and the foundation is largely dependent on the bearing application and operating conditions. Therefore, the oil flow in the diagram is valid only when the bearing application and operating conditions are similar to those indicated here.

The calculations for this diagram have been made using an SKF computer program to give the outer ring temperature. The load at each speed corresponds to the minimum recommended bearing life of 120 000 h. The oil flow in the diagram is based on an ISO VG 220 oil and selected to fulfil two criteria: the κ guidelines and a bearing operating temperature of 75 °C. If an oil with lower viscosity than ISO VG 220 is used then the oil flow must be increased.

Note that the diagram shows minimum oil flow. Slightly higher oil flow values are acceptable and beneficial in most cases.

Bearing application

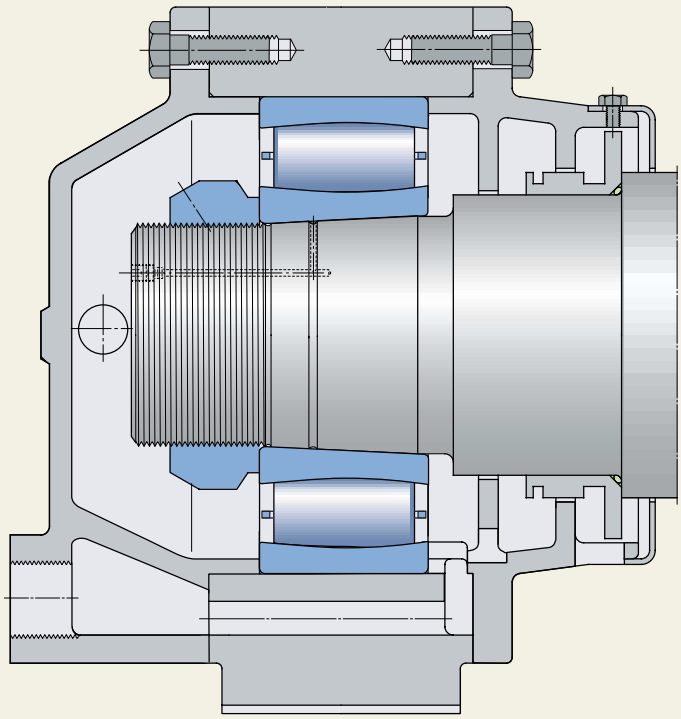

Oil flows for bearing temperature 75 °C (167 °F)

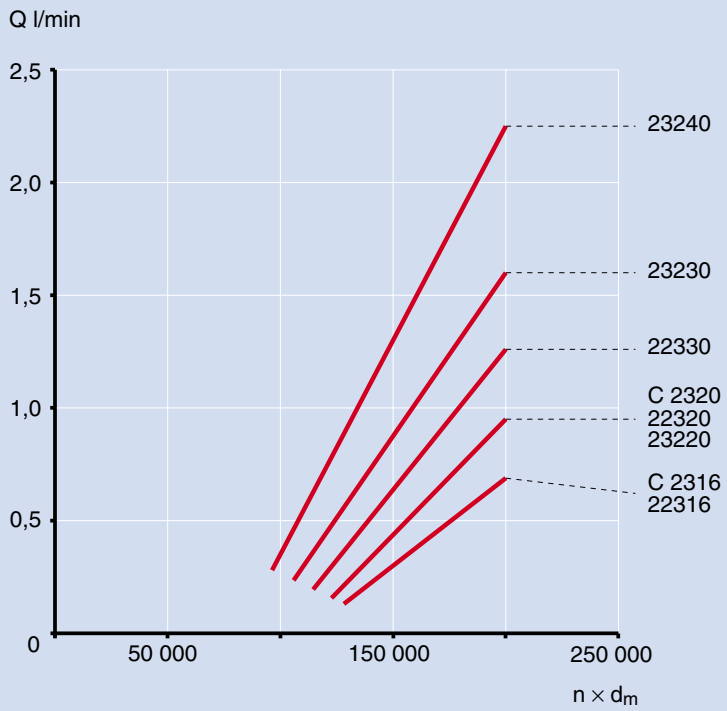

Example 3

Wire roll (grease)

Machine data

Paper qualities	all
Roll position	forming section
Paper speed	100–1 300 m/min (330–4 260 fpm)

Operating conditions for the bearings

Rotational speed	5–45 % of the speed rating
Ambient temperature	35 °C (95 °F)
Lubrication	grease
Base oil viscosity	175 mm^2/s at 40 °C

Lubrication guidelines

SKF experience is that a grease with a base oil viscosity of minimum 175 mm^2/s has good lubrication performance in this position. Rust protection and sealing properties have the highest priority in the forming section.

General guidelines, as outlined under “Grease lubrication” (→ **pages 91–94**), should also be taken into account.

Comments on the diagram

Bearing temperature depends on the bearing speed, applied load and external cooling or heating of the bearing arrangement. Heat transfer from the housing, shaft and the foundation is largely dependent on the bearing application and operating conditions. Therefore, the calculated bearing temperatures in the diagram are valid only when the bearing application and operating conditions are similar to those indicated here.

The calculations for this diagram have been made using an SKF computer program to give the outer ring temperature. The load at each speed corresponds to the minimum recommended bearing life of 120 000 h. The highest bearing temperature shown in the diagram is 75 °C as it is customary to use oil lubrication at higher temperatures.

Bearing application

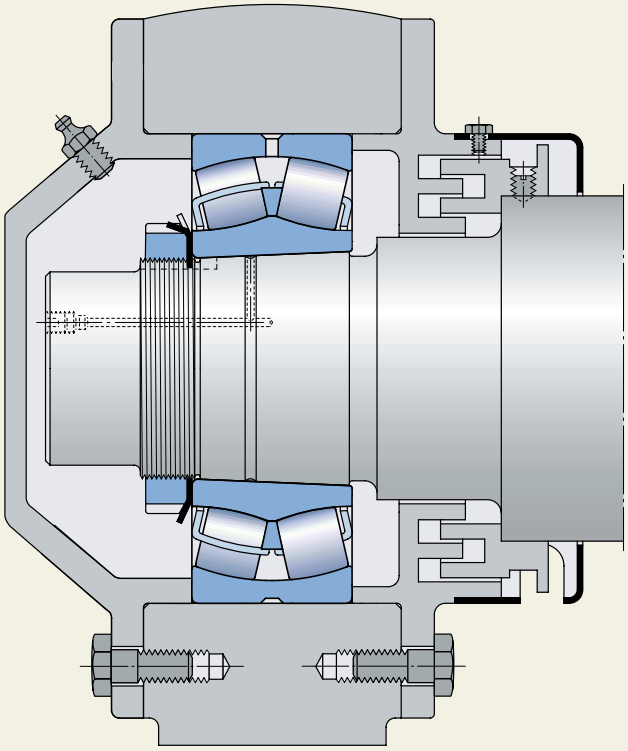

Bearing temperature/speed factor diagram

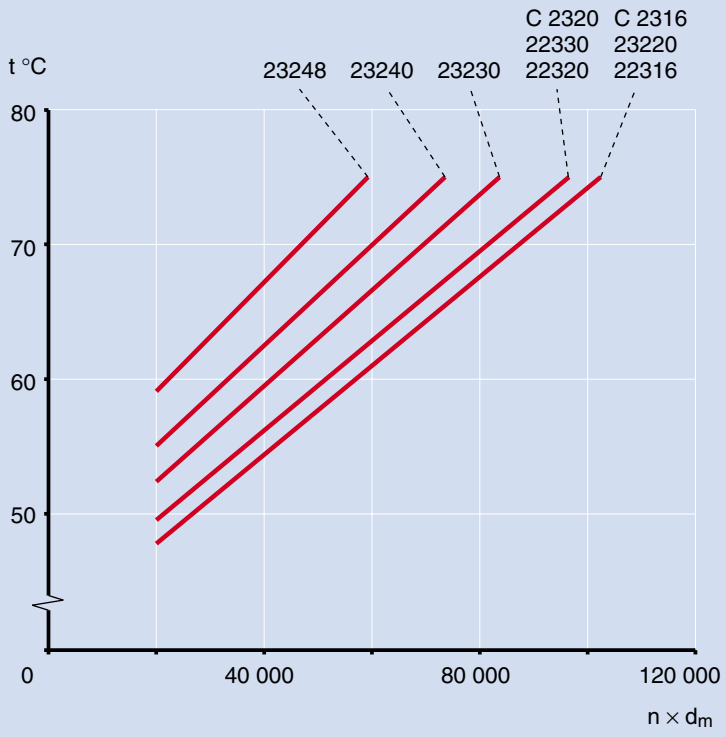

Example 4

Wire roll (oil)

Machine data

Paper qualities	liner, fine, newsprint, tissue
Roll position	forming section
Paper speed	700–2 200 m/min (2 300–7 220 fpm)

Operating conditions for the bearings

Rotational speed	25–70 % of the speed rating
Ambient temperature	40 °C (104 °F)
Lubrication	circulating oil
Oil viscosity	ISO VG 220
Oil inlet temperature	45 °C (113 °F)

Lubrication guidelines

Wire guide roll bearings are smaller and have a lower speed factor ($n \times d_m$), than suction roll bearings which are often lubricated with the same oil. Therefore, the lubricant properties should be based on the operating conditions for the suction roll bearings (**➔ example 6**). However, the wire roll bearings should have an oil flow giving viscosity ratio κ according to the guidelines on **page 207**.

General guidelines, as outlined under “Oil lubrication” (**➔ pages 95–97**), should also be taken into account.

Comments on the diagram

Bearing temperature depends on the bearing speed, applied load and external cooling or heating of the bearing arrangement. Heat transfer from the housing, shaft and the foundation is largely dependent on the bearing application and operating conditions. Therefore, the oil flow in the diagram is valid only when the bearing application and operating conditions are similar to those indicated here.

The calculations for this diagram have been made using an SKF computer program to give the outer ring temperature. The load at each speed corresponds to the minimum recommended bearing life of 120 000 h. The oil flow in the diagram is based on an ISO VG 220 oil and selected to fulfil two criteria: the κ guidelines and a bearing operating temperature of 75 °C. If an oil with lower viscosity than ISO VG 220 is used then the oil flow must be increased.

Note that the diagram shows minimum oil flow. Slightly higher oil flow values are acceptable and beneficial in most cases.

Bearing application

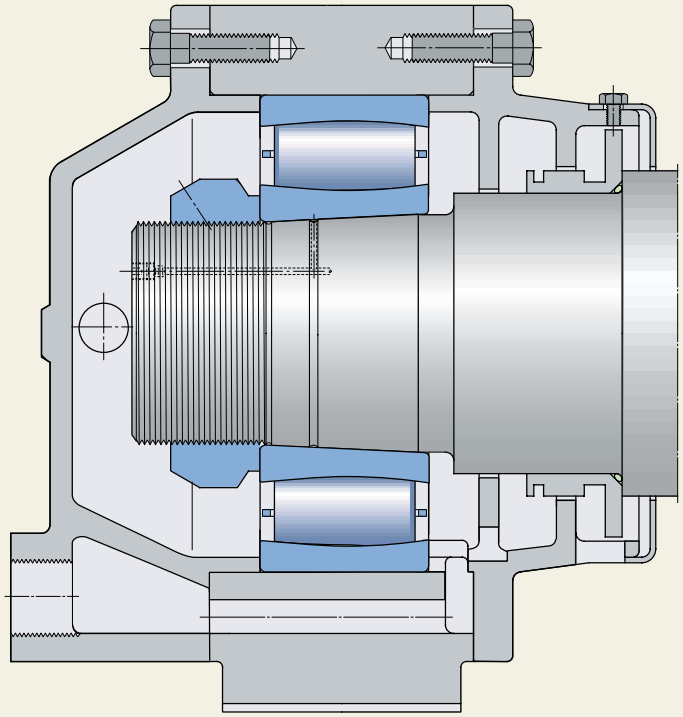

Oil flows for bearing temperature 75 °C (167 °F)

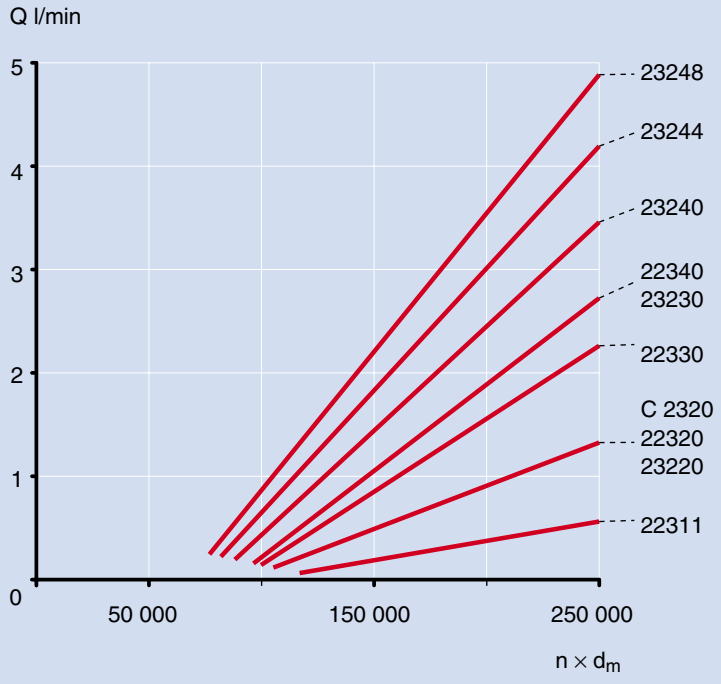

Example 5

Suction roll (grease)

Machine data

Paper qualities	board, liner
Roll position	forming section
Paper speed	100–500 m/min (330–1 640 fpm)

Operating conditions for the bearings

Rotational speed	5–55 % of the speed rating
Ambient temperature	40 °C (104 °F)
Lubrication	grease
Base oil viscosity	175 mm^2/s at 40 °C

Lubrication guidelines

SKF experience is that a grease with a base oil viscosity of minimum 175 mm^2/s has good lubrication performance in this position. Rust protection and sealing properties have the highest priority in the forming section.

General guidelines, as outlined under “Grease lubrication” (→ **pages 91–94**), should also be taken into account.

Comments on the diagram

Bearing temperature depends on the bearing speed, applied load and external cooling or heating of the bearing arrangement. Heat transfer from the housing, shaft and the foundation is largely dependent on the bearing application and operating conditions. Therefore, the calculated bearing temperatures in the diagram are valid only when the bearing application and operating conditions are similar to those indicated here.

The calculations for this diagram have been made using an SKF computer program to give the outer ring temperature at different speeds. The load at each speed corresponds with the minimum recommended bearing life of 120 000 h.

The maximum bearing temperature shown in the diagram is 75 °C as it is customary to use oil lubrication at higher temperatures.

Bearing application

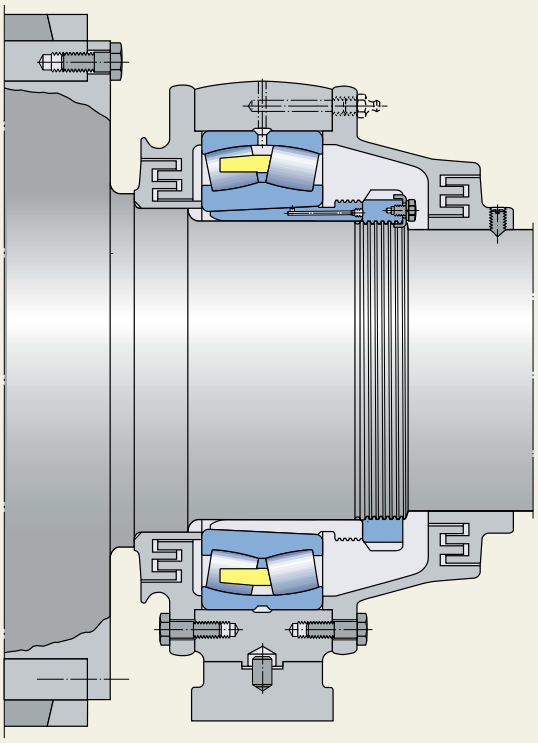

Bearing temperature/speed factor diagram

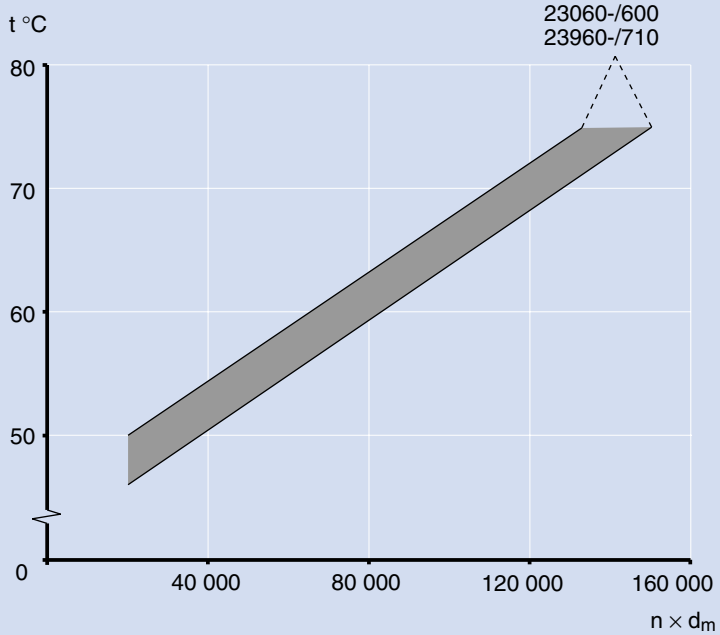

Example 6

Suction roll (oil)

Machine data

Paper qualities	board, liner, fine, newsprint
Roll position	forming section
Paper speed	400–2 000 m/min (1 320–6 550 fpm)

Operating conditions for the bearings

Rotational speed	10–165 % of the speed rating
Ambient temperature	45 °C (113 °F)
Lubrication	circulating oil
Oil viscosity	ISO VG 220
Oil inlet temperature	45 °C (113 °F)

Lubrication guidelines

As suction roll bearings are large and sometimes rotate at very high speeds there is a risk of smearing. To avoid smearing, the oil should have EP additives and the viscosity ratio κ should be according to the guidelines on **page 207.**

General guidelines, as outlined under “Oil lubrication” (➔ **pages 95–97**), should also be taken into account.

Comments on the diagram

Bearing temperature depends on the bearing speed, applied load and external cooling or heating of the bearing arrangement. Heat transfer from the housing, shaft and the foundation is largely dependent on the bearing application and operating conditions. Therefore, the oil flow in the diagram is valid only when the bearing application and operating conditions are similar to those indicated here.

The calculations for this diagram have been made using an SKF computer program to give the outer ring temperature. The load at each speed corresponds to the minimum recommended bearing life of 120 000 h. The oil flow in the diagram is based on an ISO VG 220 oil and selected to fulfil two criteria: the κ guidelines and a bearing operating temperature of 75 °C. If an oil with lower viscosity than ISO VG 220 is used for these bearings then the oil flows must be increased. A thicker oil, e.g. ISO VG 320, is advantageous and will improve the lubrication conditions, but the bearing temperature will increase a little.

Note that the diagram shows minimum oil flow. Slightly higher oil flow values are acceptable and beneficial in most cases.

Bearing application

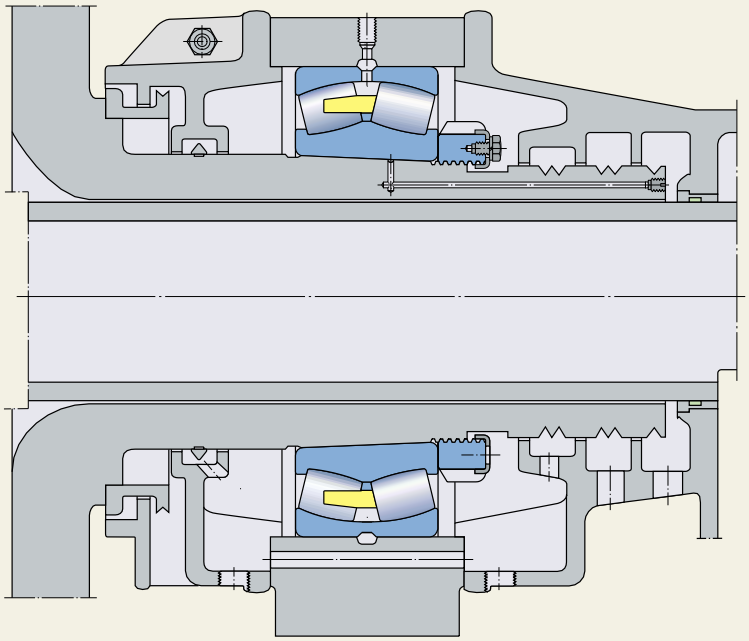

Oil flows for bearing temperature 75 °C (167 °F)

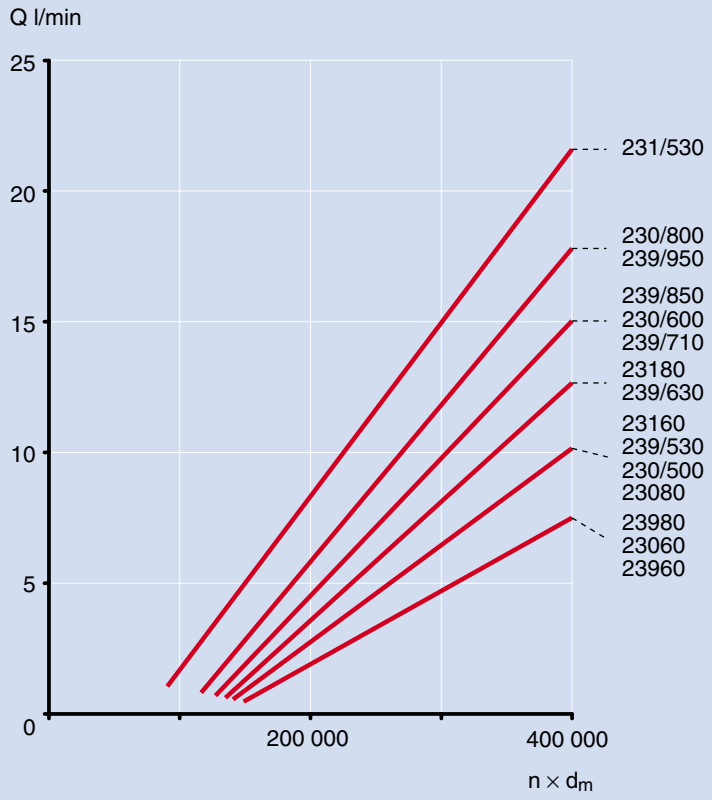

Example 7

Felt roll (grease)

Machine data

Paper qualities	all
Roll position	press section
Paper speed	100–1 000 m/min (330–3 300 fpm)

Operating conditions for the bearings

Rotational speed	5–40 % of the speed rating
Ambient temperature	40 °C (104 °F)
Lubrication	grease
Base oil viscosity	175 mm^2/s at 40 °C

Lubrication guidelines

SKF experience is that a grease with a base oil viscosity of minimum 175 mm^2/s has good lubrication performance in this position. Rust protection and sealing properties have the highest priority in the forming section.

General guidelines, as outlined under “Grease lubrication” (→ **pages 91–94**), should also be taken into account.

Comments on the diagram

Bearing temperature depends on the bearing speed, applied load and external cooling or heating of the bearing arrangement. Heat transfer from the housing, shaft and the foundation is largely dependent on the bearing application and operating conditions. Therefore, the calculated bearing temperatures in the diagram are valid only when the bearing application and operating conditions are similar to those indicated here.

The calculations for this diagram have been made using an SKF computer program to give the outer ring temperature. The load at each speed corresponds to the minimum recommended bearing life of 120 000 h. The highest bearing temperature shown in the diagram is 75 °C as it is customary to use oil lubrication at higher temperatures.

Bearing application

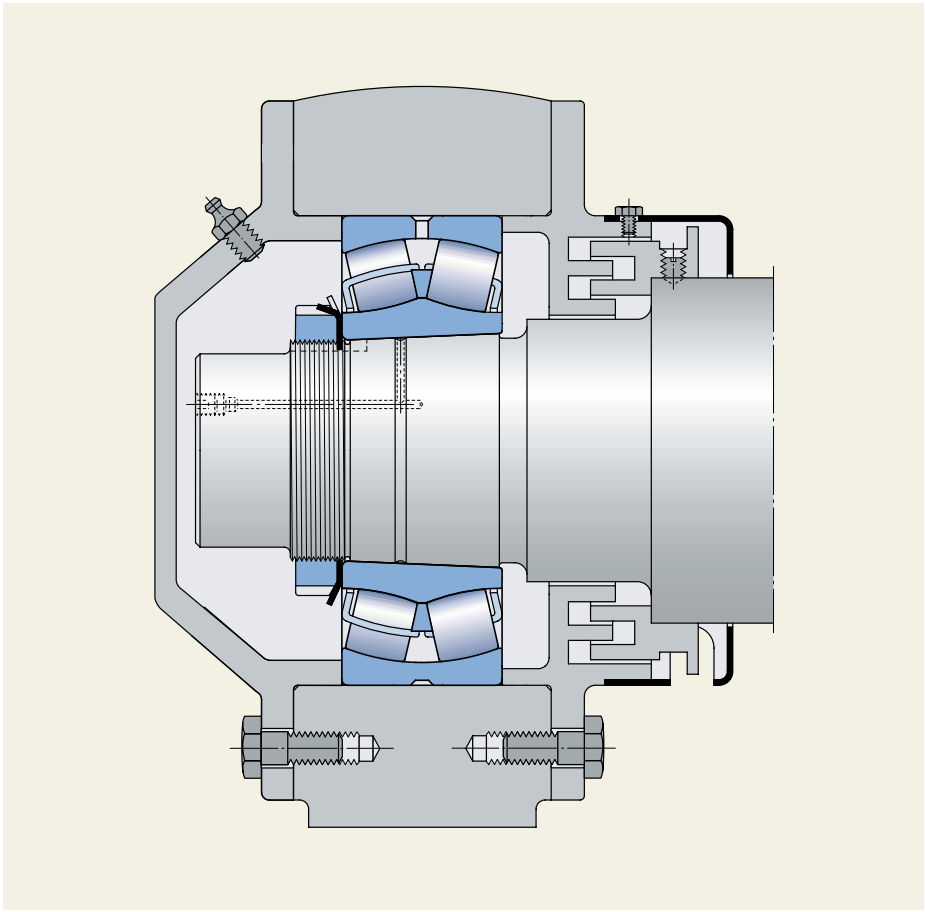

Bearing temperature/speed factor diagram

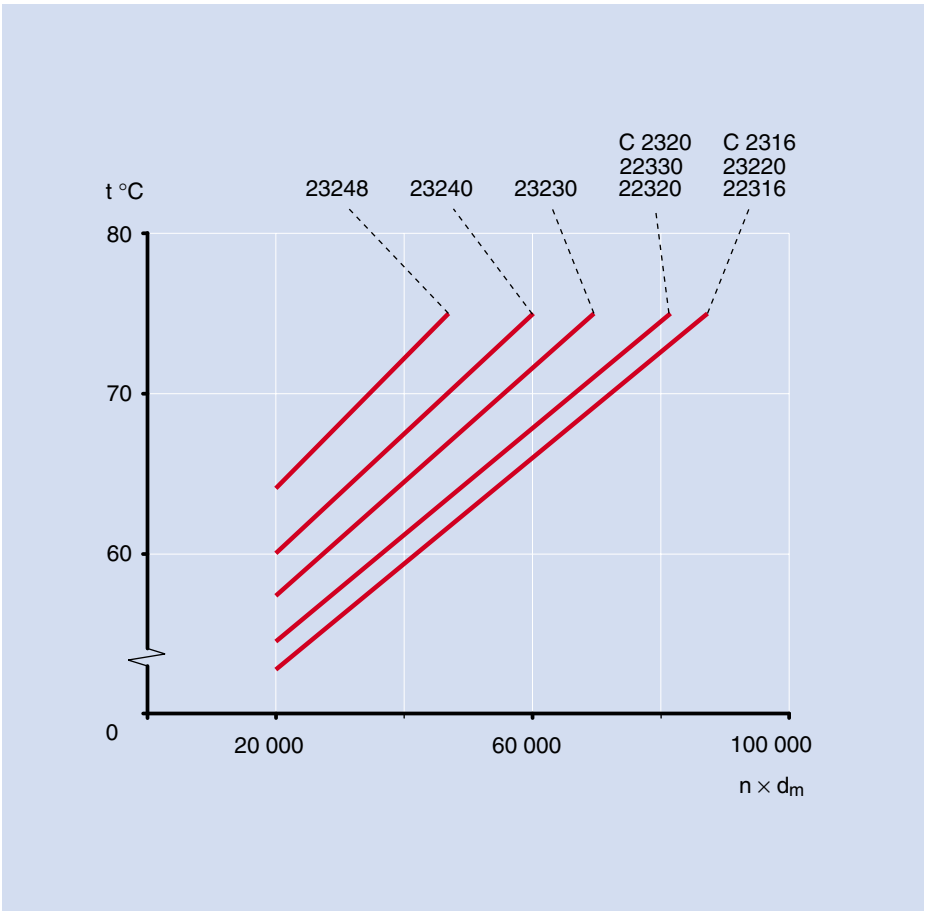

Example 8

Felt roll (oil)

Machine data

Paper qualities	all
Roll position	press section
Paper speed	400–2 200 m/min (1 310–7 220 fpm)

Operating conditions for the bearings

Rotational speed	20–70 % of the speed rating
Ambient temperature	45 °C (113 °F)
Lubrication	circulating oil
Oil viscosity	ISO VG 220
Oil inlet temperature	45 °C (113 °F)

Lubrication guidelines

Felt roll bearings are smaller, and have lower speed factors ($n \times d_m$), than press roll bearings which are often lubricated with the same oil. Therefore, the lubricant properties should be based on the operating conditions for the press roll bearings. However, the felt roll bearings should have an oil flow giving a viscosity ratio κ according to the guidelines on **page 207**.

General guidelines, as outlined under “Oil lubrication” (➔ **pages 95–97**), should also be taken into account.

Comments on the diagram

Bearing temperature depends on the bearing speed, applied load and external cooling or heating of the bearing arrangement. Heat transfer from the housing, shaft and the foundation is largely dependent on the bearing application and operating conditions. Therefore, the oil flow in the diagram is valid only when the bearing application and operating conditions are similar to those indicated here.

The calculations for this diagram have been made using an SKF computer program to give the outer ring temperature. The load at each speed corresponds to the minimum recommended bearing life of 120 000 h. The oil flow in the diagram is based on an ISO VG 220 oil and selected to fulfil two criteria: the κ guidelines and a bearing operating temperature of 75 °C.

Note that the diagram shows minimum oil flow. Slightly higher oil flow values are acceptable and beneficial in most cases.

Bearing application

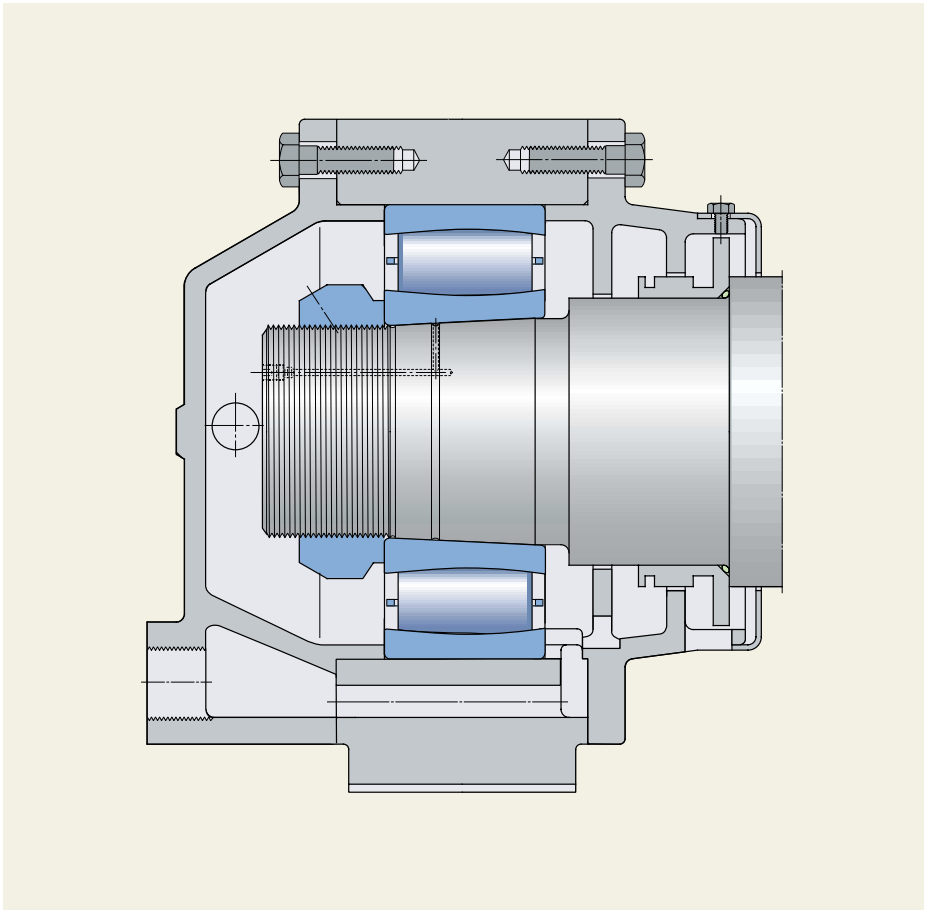

Oil flows for bearing temperature 75 °C (167 °F)

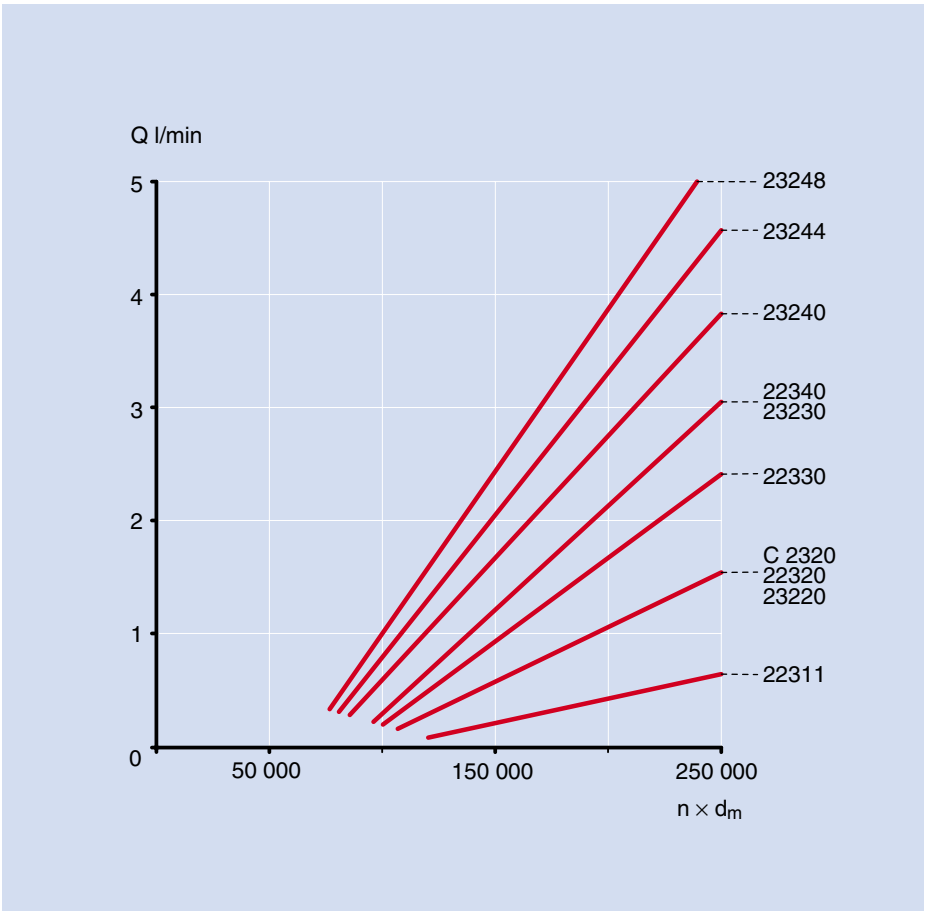

Example 9

Press roll (grease)

Machine data

Paper qualities	board, liner
Roll position	press section
Paper speed	100–500 m/min (330–1 640 fpm)

Operating conditions for the bearings

Rotational speed	5–30 % of the speed rating
Ambient temperature	40 °C (104 °F)
Lubrication	grease
Base oil viscosity	175 mm^2/s at 40 °C

Lubrication guidelines

SKF experience is that a grease with a base oil viscosity of minimum 175 mm^2/s has good lubrication performance in this position. Rust protection and sealing properties have the highest priority in the forming section.

General guidelines, as outlined under “Grease lubrication” (➔ **pages 91–94**), should also be taken into account.

Comments on the diagram

Bearing temperature depends on the bearing speed, applied load and external cooling or heating of the bearing arrangement. Heat transfer from the housing, shaft and the foundation is largely dependent on the bearing application and operating conditions. Therefore, the calculated bearing temperatures in this example are valid only when the bearing application and operating conditions are similar to those indicated here.

The calculations for this diagram have been made using an SKF computer program to give the outer ring temperature at different speeds. The load at each speed corresponds with the minimum recommended bearing life of 120 000 h.

The maximum bearing temperature shown in the diagram is 75 °C as it is customary to use oil lubrication at higher temperatures.

Bearing application

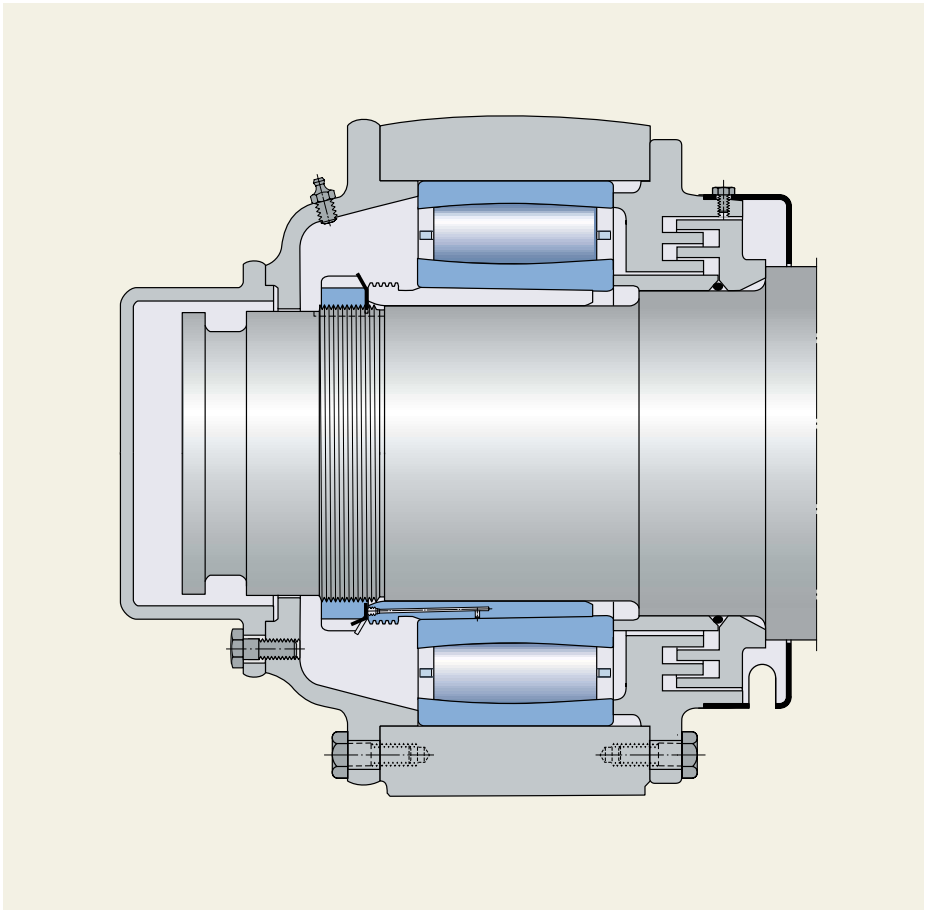

Bearing temperature/speed factor diagram

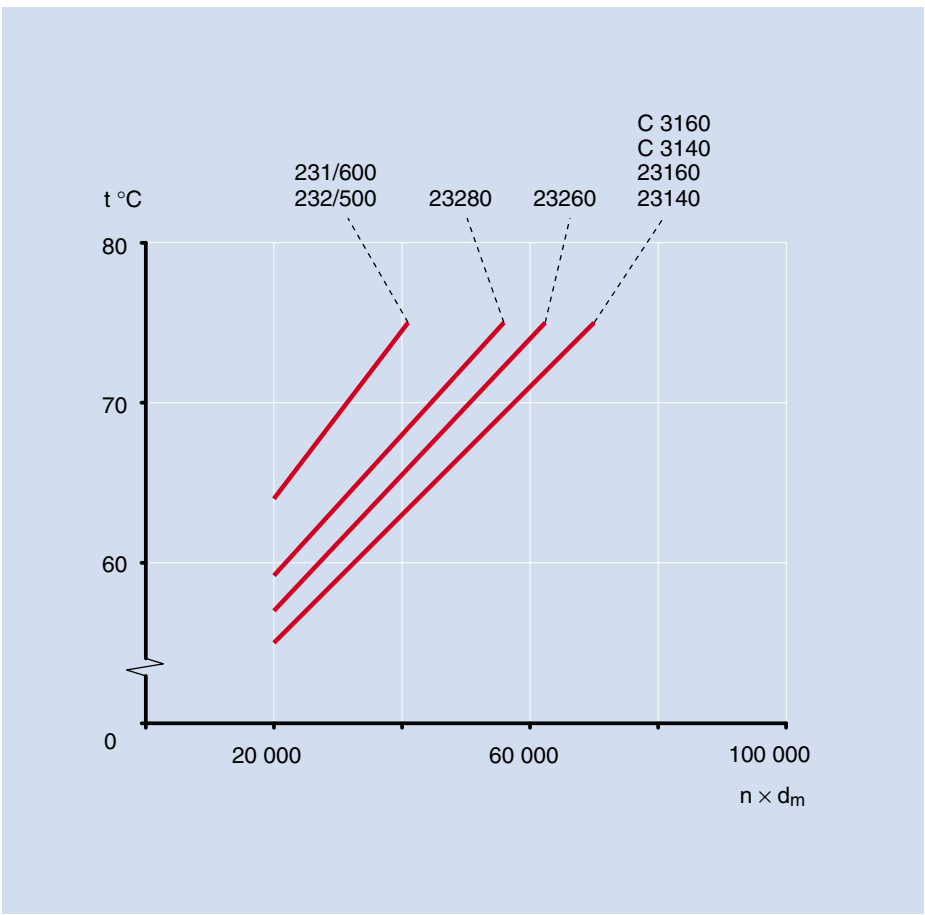

Example 10

Press roll (oil)

Machine data

Paper qualities	board, liner, fine, newsprint
Roll position	press section
Paper speed	400–2 000 m/min (1 320–6 550 fpm)

Operating conditions for the bearings

Rotational speed	15–110 % of the speed rating
Ambient temperature	45 °C (113 °F)
Lubrication	circulating oil
Oil viscosity	ISO VG 220
Oil inlet temperature	45 °C (113 °F)

Lubrication guidelines

As press roll bearings are large and sometimes rotate at high speeds there is a risk of smearing. To avoid smearing, the oil should have EP additives and the viscosity ratio κ should be according to the guidelines on **page 207**.

General guidelines, as outlined under “Oil lubrication” (**➔ pages 95–97**), should also be taken into account.

Comments on the diagram

Bearing temperature depends on the bearing speed, applied load and external cooling or heating of the bearing arrangement. Heat transfer from the housing, shaft and the foundation is largely dependent on the bearing application and operating conditions. Therefore, the oil flow in the diagram is valid only when the bearing application and operating conditions are similar to those indicated here.

The calculations for this diagram have been made using an SKF computer program to give the outer ring temperature. The load at each speed corresponds to the minimum recommended bearing life of 120 000 h.

The oil flow in the diagram is based on an ISO VG 220 oil and selected to fulfil two criteria: the κ guidelines and a bearing operating temperature of 75 °C. If an oil with lower viscosity than ISO VG 220 is used for these bearings then the oil flow must be increased. A thicker oil, e.g. ISO VG 320, is advantageous and will improve the lubrication conditions,but the bearing temperature will increase a little.

Note that the diagram shows minimum oil flow. Slightly higher oil flow values are acceptable and beneficial in most cases.

Bearing application

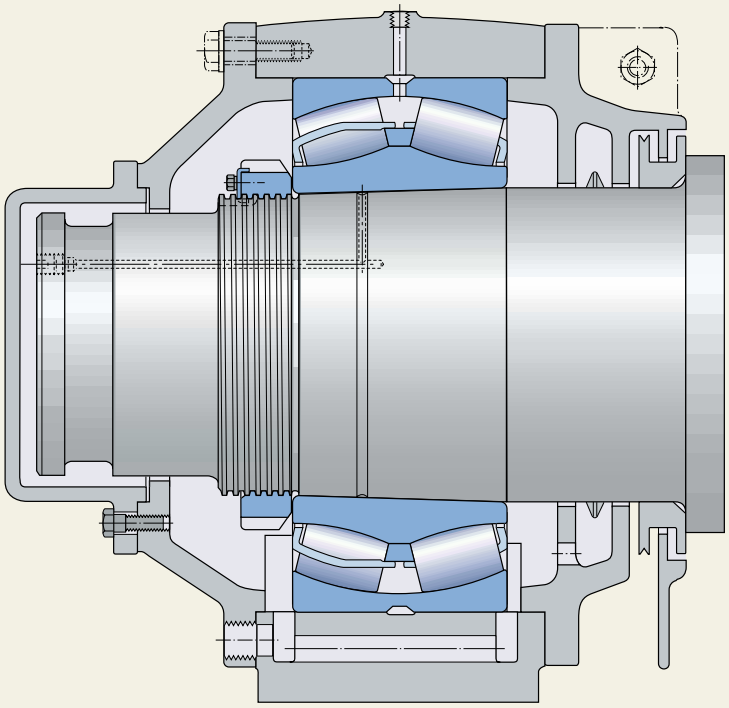

Oil flows for bearing temperature 75 °C (167 °F)

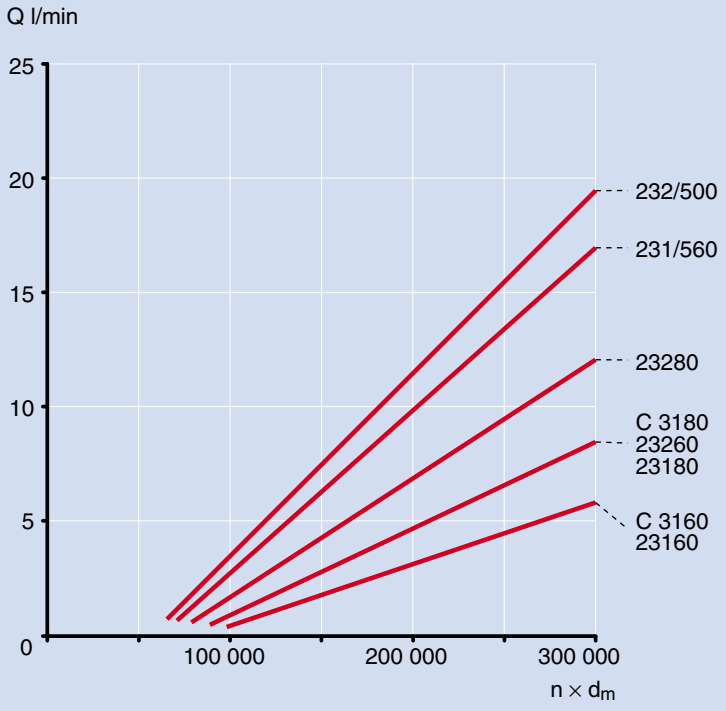

Example 11

Press roll, deflection compensating (oil)

Machine data

Paper qualities	all
Roll position	press section
Paper speed	400–2 000 m/min (1 320–6 550 fpm)

Operating conditions for the bearings

Rotational speed	20–150 % of the speed rating
Ambient temperature	45 °C (113 °F)
Lubrication	circulating oil
Oil viscosity	ISO VG 220
Oil inlet temperature	45 °C (113 °F)

Lubrication guidelines

As press roll bearings are large and sometimes rotate at very high speeds there is a risk of smearing. To avoid smearing, the oil should have EP additives and the viscosity ratio κ should be according to the guidelines on **page 207**.

General guidelines, as outlined under “Oil lubrication” (**➔ pages 95–97**), should also be taken into account.

Comments on the diagram

Bearing temperature depends on the bearing speed, applied load and external cooling or heating of the bearing arrangement. Heat transfer from the housing, shaft and the foundation is largely dependent on the bearing application and operating conditions. Therefore, the oil flow in the diagram is valid only when the bearing application and operating conditions are similar to those indicated here.

The calculations for this diagram have been made using an SKF computer program to give the outer ring temperature. The load at each speed corresponds to the minimum recommended bearing life of 120 000 h.

The oil flow in the diagram is based on an ISO VG 220 oil and selected to fulfil two criteria: the κ guidelines and a bearing operating temperature of 75 °C. If an oil with lower viscosity than ISO VG 220 is used for these bearings then the oil flow must be increased. A thicker oil, e.g. ISO VG 320, is advantageous and will improve the lubrication conditions, but the bearing temperature will increase a little.

Note that the diagram shows minimum oil flow. Slightly higher oil flow values are acceptable and beneficial in most cases.

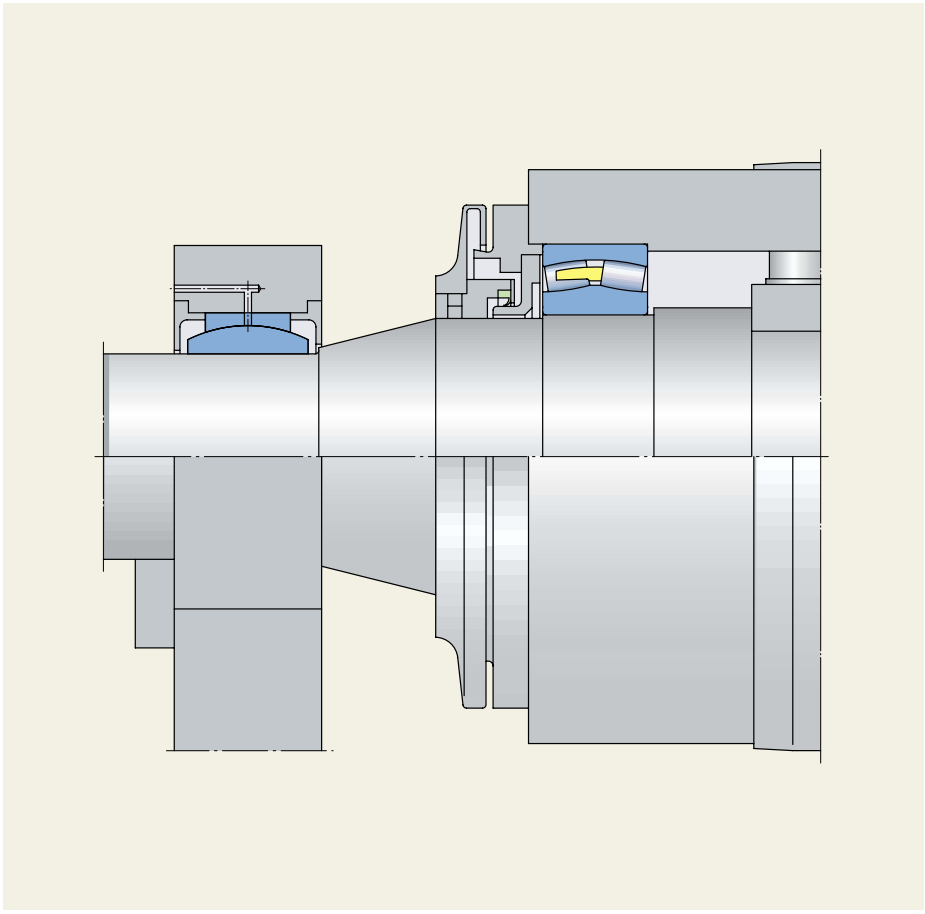

Bearing application

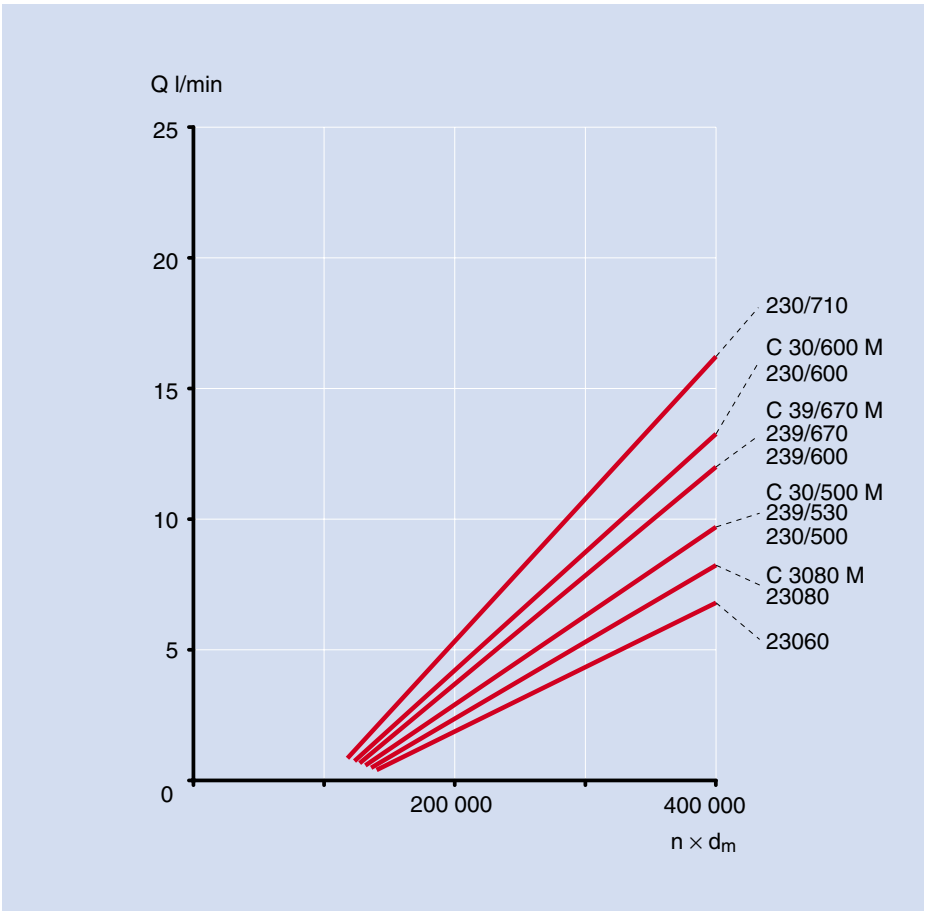

Oil flows for bearing temperature 75 °C (167 °F)

Example 12

Felt roll (grease)

Machine data

Paper qualities	board, liner, fine, newsprint
Roll position	dryer section
Paper speed	100–800 m/min (330–2 620 fpm)

Operating conditions for the bearings

Rotational speed	5–35 % of the speed rating
Ambient temperature	80–100 °C (176–212 °F)
Lubrication	grease
Base oil viscosity	400 mm^2/s at 40 °C

Lubrication guidelines

This example is included in the handbook as there are still some old machines using grease lubrication for guide roll bearings in the dryer section.

However, SKF experience is that it is difficult to find “standard” greases which will have good lubrication properties at operating temperatures above 120 °C. Therefore, the SKF test program for high-temperature greases is based on a maximum bearing operating temperature of 120 °C.

Greases which have passed the test programme should give sufficient lubrication for the bearings in this position. Oxidation stability and oil bleeding properties have the highest priority in the dryer section.

General guidelines, as outlined under “Grease lubrication” (➔ **pages 91–94**), should also be taken into account.

Grease lubrication should not be applied when the bearing temperature is above 120 °C. However, there are greases on the market that can be used at temperatures above 120 °C, but in such cases it is up to the grease supplier to give the recommendation.

Comments on the diagram

Bearing temperature depends on the bearing speed, applied load and external cooling or heating of the bearing arrangement. Heat transfer from the housing, shaft and the foundation is largely dependent on the bearing application and operating conditions. Therefore, the calculated bearing temperatures in this example are valid only when the bearing application and operating conditions are similar to those indicated here.

The calculations for this diagram have been made using an SKF computer program to give the outer ring temperature at different speeds. The load at each speed corresponds with the minimum recommended bearing life of 200 000 h.

Note that the ambient temperature has a great influence on the bearing operating temperature.

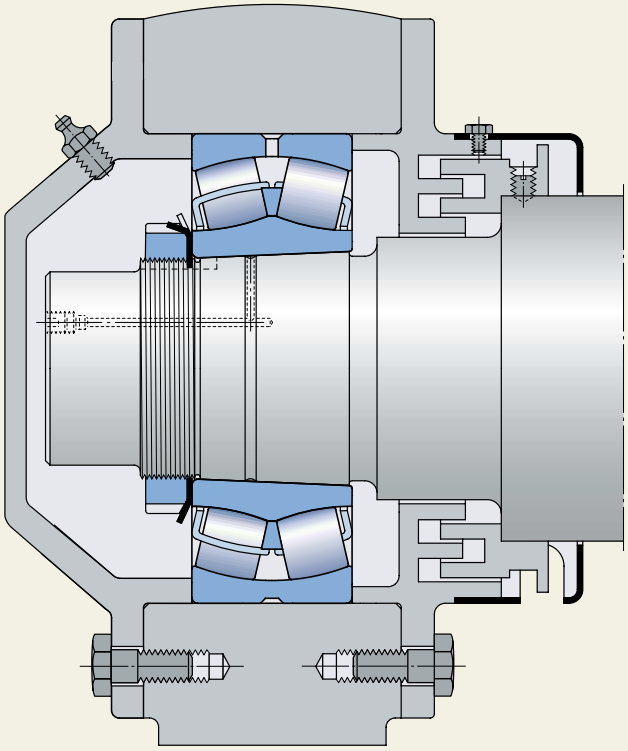

Bearing application

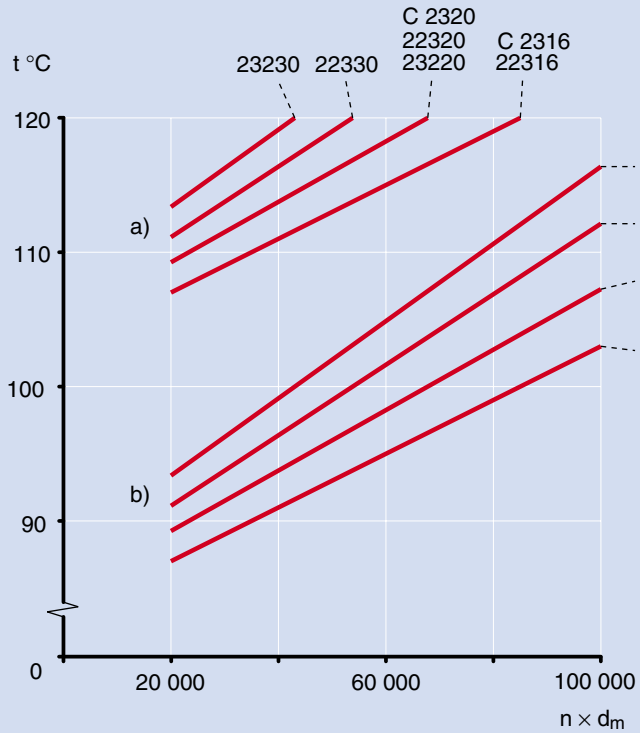

Bearing temperature/speed factor diagram
a) Ambient temperature 100 °C
b) Ambient temperature 80 °C

Example 13

Felt roll (oil)

Machine data

Paper qualities	board, liner, fine, newsprint
Roll position	dryer section
Paper speed	400–2 000 m/min (1 310–6 550 fpm)

Operating conditions for the bearings

Rotational speed	20–55 % of the speed rating
Ambient temperature	100 °C (212 °F)
Lubrication	circulating oil
Oil viscosity	ISO VG 220
Oil inlet temperature	60 °C (140 °F)

Lubrication guidelines

Felt roll bearings have better operating conditions than drying cylinder bearings which are lubricated from the same circulating oil system. Therefore, the lubricant properties should be based on the operating conditions for drying cylinder bearings. However, the felt roll bearings should have an oil flow giving viscosity ratio κ according to the guidelines on **page 207**.

General guidelines, as outlined under “Oil lubrication” (➔ **pages 95–97**), should also be taken into account.

Comments on the diagram

Bearing temperature depends on the bearing speed, applied load and external cooling or heating of the bearing arrangement. Heat transfer from the housing, shaft and the foundation is largely dependent on the bearing application and operating conditions. Therefore, the oil flow in the diagram is valid only when the bearing application and operating conditions are similar to those indicated here.

The calculations for this diagram have been made using SKF computer program to give the outer ring temperature. The load at each speed corresponds to the minimum recommended bearing life of 200 000 h.

The oil flow in the diagram is based on an ISO VG 220 oil and selected to fulfil two criteria: the κ guidelines and a bearing operating temperature of 90 °C. If an oil with lower viscosity than ISO VG 220 is used the flow must be increased.

A thicker oil, e.g. ISO VG 320, is advantageous and will improve the lubrication conditions, but the bearing temperature will increase a little.

Note that the diagram shows minimum oil flow. Slightly higher oil flow values are acceptable and beneficial in most cases.

Bearing application

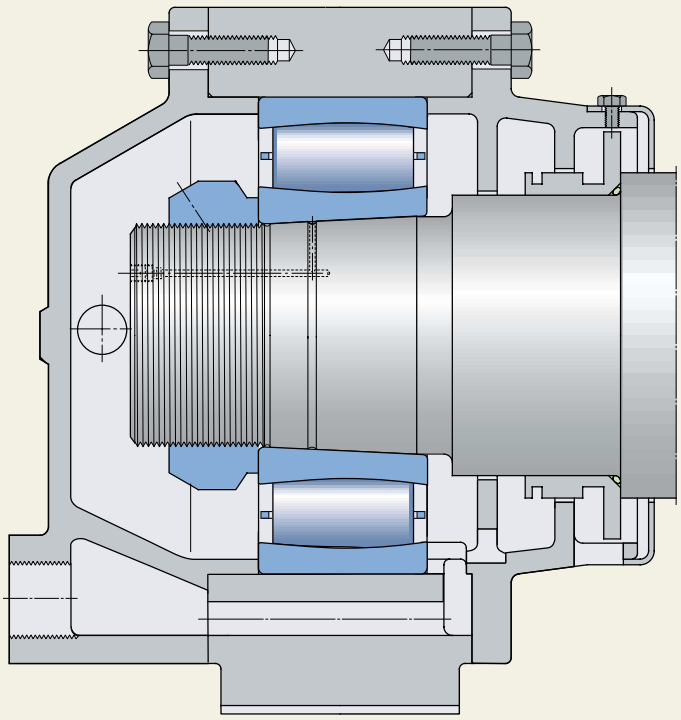

Oil flows for bearing temperatures 90 °C (194 °F)

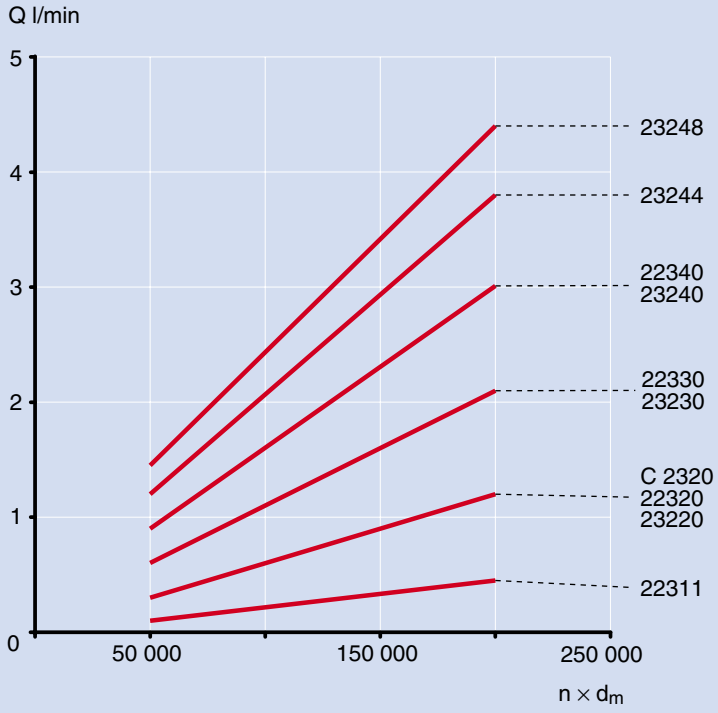

Example 14

Drying cylinder with steam temperature 140 °C (284 °F) (oil bath)

Machine data

Paper qualities	board, fine (old machines)
Roll position	dryer section
Paper speed	100–150 m/min (330–490 fpm)

Operating conditions for the bearings

Rotational speed	1–3 % of the speed rating
Ambient temperature	75 °C (167 °F)
Lubrication	oil bath
Oil viscosity	ISO VG 220–1 500
Journal insulation	none

Lubrication guidelines

As the drying cylinder bearings in this example rotate at very low speeds and are subjected to high temperatures there will be metallic contact between rollers and raceways. This means that there is a risk of surface distress. To avoid this risk the lubricating oil should have efficient AW additives and a viscosity ratio κ according to the guidelines on **page 207**.

A synthetic oil is recommended, because mineral oils are not suitable at temperatures above 120 °C.

General guidelines, as outlined under “Oil lubrication” (➔ **pages 95–97**), should also be taken into account.

Comments on the diagram

Bearing temperature depends on the bearing speed, applied load and external cooling or heating of the bearing arrangement. Therefore, the calculated bearing temperatures in the diagram are valid only when the bearing application and operating conditions are similar to those indicated here.

The calculations for this diagram have been made using an SKF computer program to give the inner ring temperature. The load at each speed corresponds to the minimum recommended bearing life of 200 000 h. Note that the bearing temperature is lower at “high” speeds than at low speeds. The reason is that the increase in cooling via the rotating journal is higher than the increase in heat generation in the bearing. At operating temperatures above 100 °C it is not possible to fulfil the κ guidelines with commonly used ISO VG 220 oils.

The recommendation for this application is to improve the lubrication conditions as much as practically possible. The best remedy is to introduce efficient journal insulation in combination with circulating oil lubrication which will give a bearing temperature of 85–90 °C (➔ **example 16**, **pages 136–137**). Changing to an oil with one higher viscosity level than used for circulation systems is also beneficial.

Bearing application

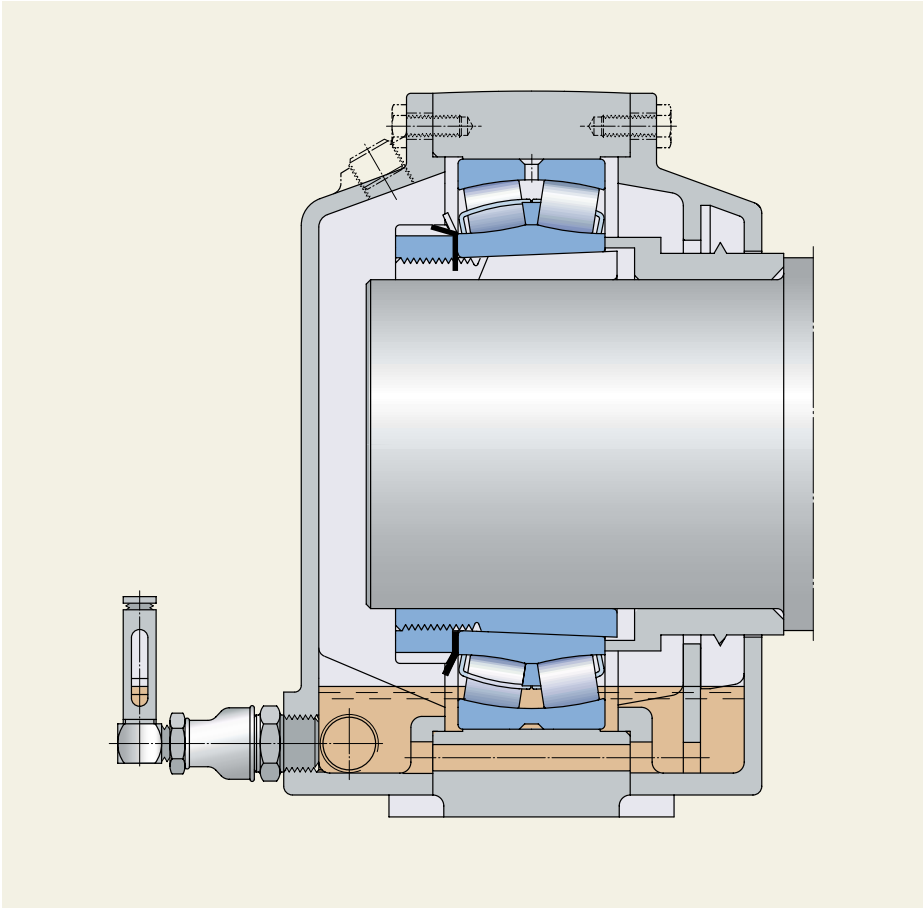

Bearing temperature/speed factor diagram

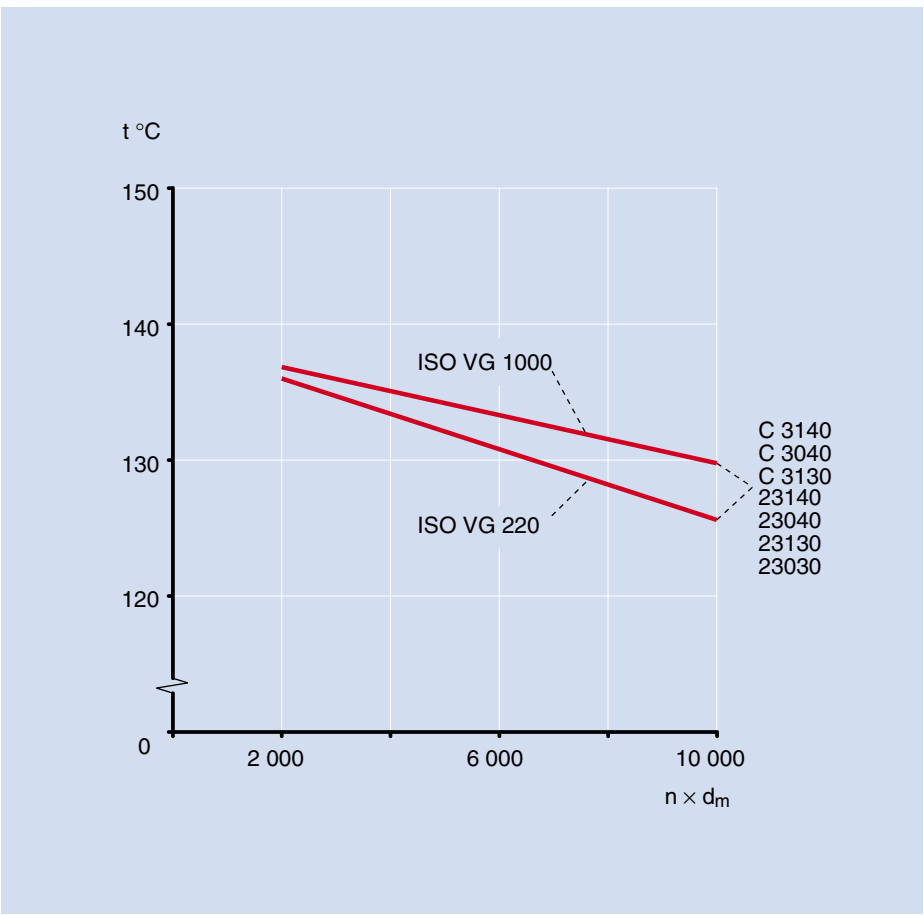

Example 15

Drying cylinder with steam temperature 140 °C (284 °F)

Machine data

Paper qualities	fine, newsprint
Roll position	dryer section
Paper speed	700–2 000 m/min (2 300–6 550 fpm)

Operating conditions for the bearings

Rotational speed	5–40 % of the speed rating
Ambient temperature	100 °C (212 °F)
Lubrication	circulating oil
Oil viscosity	ISO VG 220
Oil inlet temperature	60 °C (140 °F)
Journal insulation	none

Lubrication guidelines

As drying cylinder bearings rotate at relatively low speeds and are subjected to high temperatures there will be metallic contact between rollers and raceways. This means that there is a risk of surface distress. To avoid this risk the circulating oil should have efficient AW additives and a viscosity ratio κ according to the guidelines on **page 207**.

General guidelines, as outlined under "Oil lubrication" (→ **pages 95–97**), should also be taken into account.

Comments on the diagram

Bearing temperature depends on the bearing speed, applied load and external cooling or heating of the bearing arrangement. Therefore, the calculated bearing temperatures in the diagram are valid only when the bearing application and operating conditions are similar to those indicated here.

The calculations for this diagram have been made using an SKF computer program to give the inner ring temperature. The load at each speed corresponds to the minimum recommended bearing life of 200 000 h.

An oil flow of 0,5 l/min, which is common in old machines, gives a bearing temperature of around 120 °C.

At operating temperatures above 100 °C, it is not possible to fulfil the κ guidelines and some mineral oils have shown a strong tendency to carbonise. Therefore the recommendation for such applications is to improve the lubrication conditions as much as practically possible.

The diagram shows that the influence of the oil quantity is considerable up to 2–3 l/min, but after that scarcely anything is gained by an increased oil flow except for large size bearings at high speeds.

The best action is to introduce efficient journal insulation which gives a bearing temperature of about 85–90 °C **(→ example 16**, **pages 136–137)**. Changing to a synthetic oil is also beneficial.

Bearing application

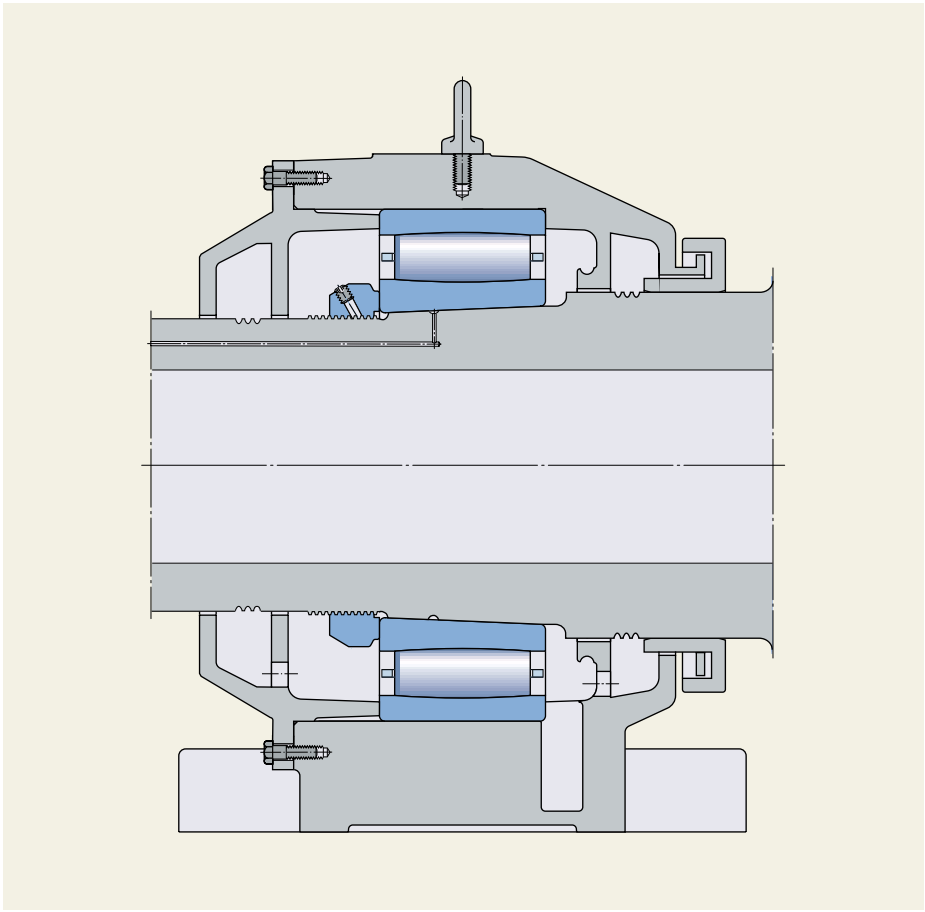

Bearing temperature/oil flow diagram

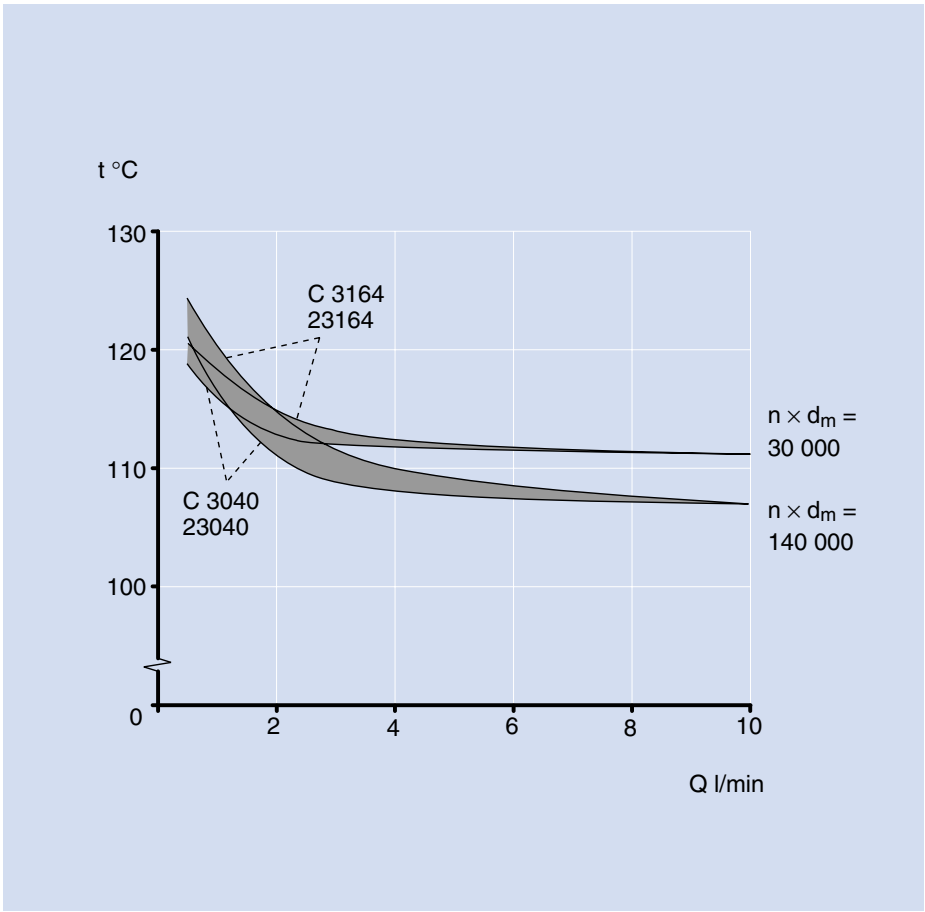

Example 16

Drying cylinder with steam temperature 140 °C (284 °F)

Machine data

Paper qualities	fine, newsprint
Roll position	dryer section
Paper speed	700–2 000 m/min (2 300–6 550 fpm)

Operating conditions for the bearings

Rotational speed	5–40 % of the speed rating
Ambient temperature	100 °C (212 °F)
Lubrication	circulating oil
Oil viscosity	ISO VG 220
Oil inlet temperature	60 °C (140 °F)
Journal insulation	yes

Lubrication guidelines

As drying cylinder bearings rotate at relatively low speeds and are subjected to high temperatures there will be metallic contact between rollers and raceways. This means that there is a risk of surface distress. To avoid this risk the circulating oil should have efficient AW additives and a viscosity ratio κ according to the guidelines on **page 207**.

General guidelines, as outlined under “Oil lubrication” (➔ **pages 95–97**), should also be taken into account.

Comments on the diagram

Bearing temperature depends on the bearing speed, applied load and external cooling or heating of the bearing arrangement. Therefore, the calculated bearing temperatures in the diagram are valid only when the bearing application and operating conditions are similar to those indicated here.

The calculations for this diagram have been made using an SKF computer program to give the inner ring temperature. The load at each speed corresponds to the minimum recommended bearing life of 200 000 h.

An oil flow of 0,5 l/min was common in the early machines with insulated journals. Such an oil flow gives a bearing temperature of around 90 °C at low speeds and around 100 °C at high speeds.

The aim for this application is to find the optimum oil flow which gives a bearing temperature somewhat below 90 °C.

The diagram shows that the influence of the oil quantity is considerable up to 2–3 l/min, but after that scarcely anything is gained by an increased oil flow except for large size bearings at high speeds.

If an ISO VG 320 oil is used instead of an ISO VG 220 one the bearing temperature will increase a little. However, use of ISO VG 320 oil would be beneficial because the viscosity ratio κ would be higher than when using an ISO VG 220 oil.

Bearing application

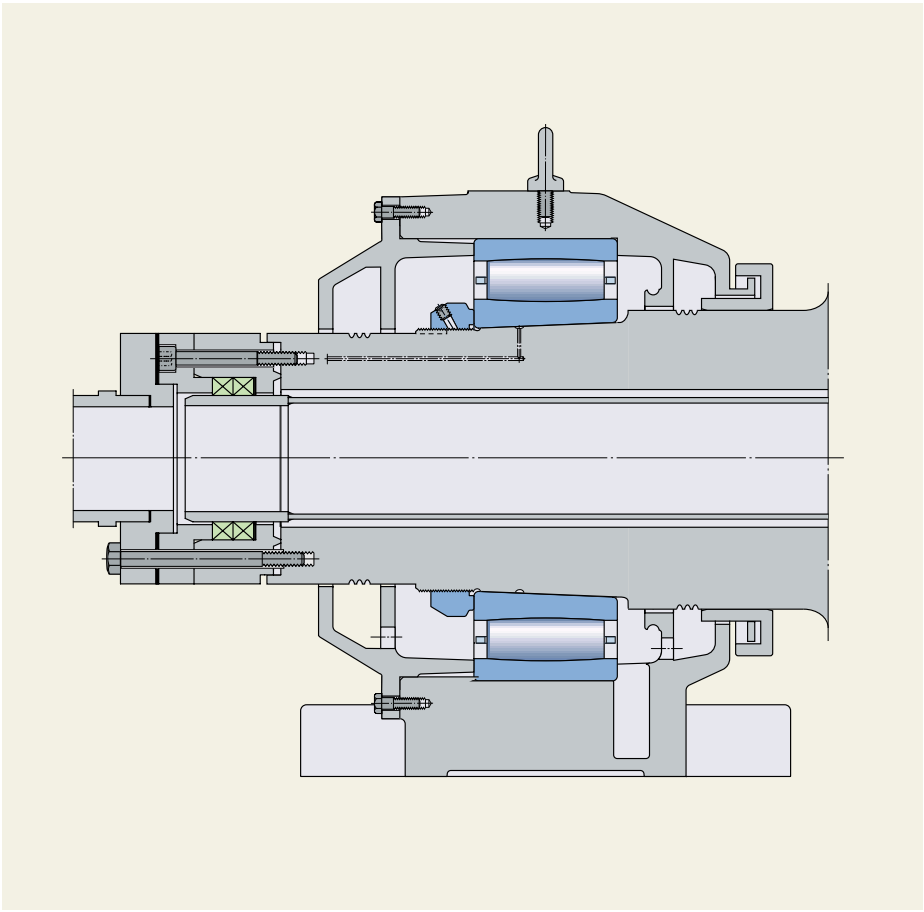

Bearing temperature/oil flow diagram

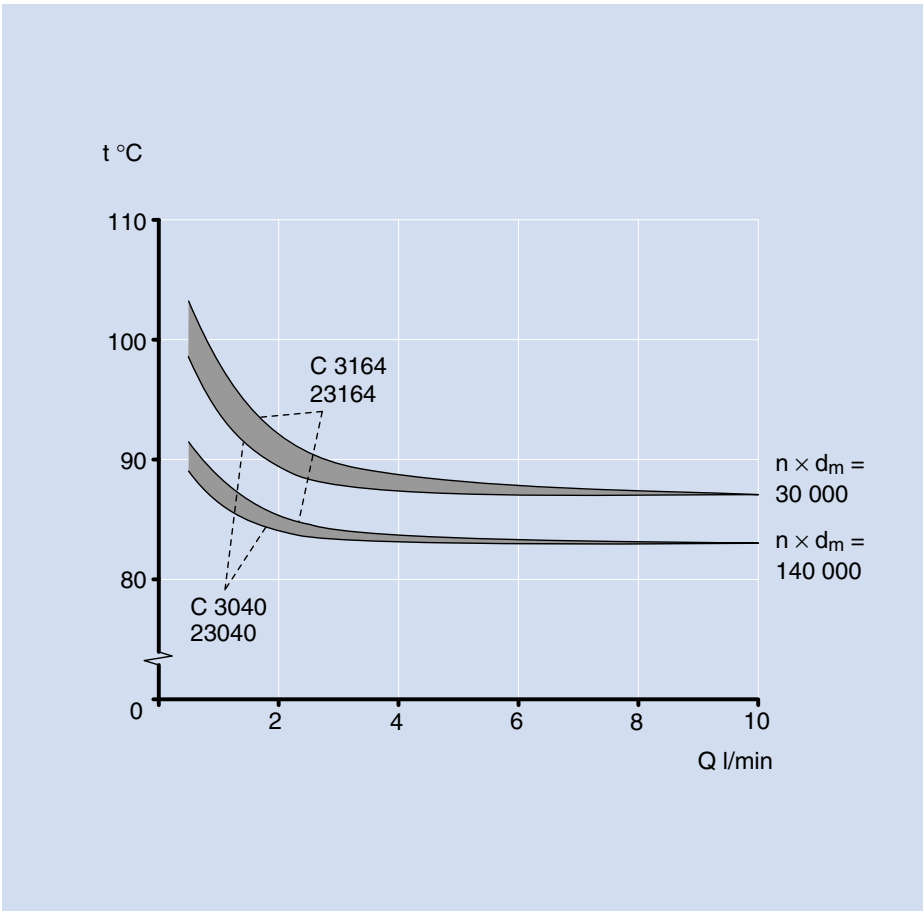

Example 17

Drying cylinder with steam temperature 165 °C (329 °F)

Machine data

Paper qualities	board, liner, fine
Roll position	dryer section
Paper speed	400–1 200 m/min (1 320–3 940 fpm)

Operating conditions for the bearings

Rotational speed	5–30 % of the speed rating
Ambient temperature	100 °C (212 °F)
Lubrication	circulating oil
Oil viscosity	ISO VG 220
Oil inlet temperature	60 °C (140 °F)
Journal insulation	none

Lubrication guidelines

As drying cylinder bearings rotate at relatively low speeds and are subjected to high temperatures there will be metallic contact between rollers and raceways. This means that there is a risk of surface distress. To avoid this risk the circulating oil should have efficient AW additives and a viscosity ratio κ according to the guidelines on **page 207**.

General guidelines, as outlined under “Oil lubrication” (**➔ pages 95–97**), should also be taken into account.

Comments on the diagram

Bearing temperature depends on the bearing speed, applied load and external cooling or heating of the bearing arrangement. Therefore, the calculated bearing temperatures in the diagram are valid only when the bearing application and operating conditions are similar to those indicated here.

The calculations for this diagram have been made using an SKF computer program to give the inner ring temperature. The load at each speed corresponds to the minimum recommended bearing life of 200 000 h.

An oil flow of 0,5 l/min, which is common in old machines, gives a bearing temperature of around 135 °C.

At operating temperatures above 100 °C, it is not possible to fulfil the κ guidelines and some mineral oils have shown a strong tendency to carbonise. Therefore the recommendation for such applications is to improve the lubrication conditions as much as practically possible.

The diagram shows that the influence of the oil quantity is considerable up to 3 l/min, but after that scarcely anything is gained by an increased oil flow except for large size bearings at high speeds.

The best action is to introduce efficient journal insulation which gives a bearing temperature of about 90 °C **(➔ example 18, pages 140–141)**. Changing to a synthetic oil is also beneficial.

Bearing application

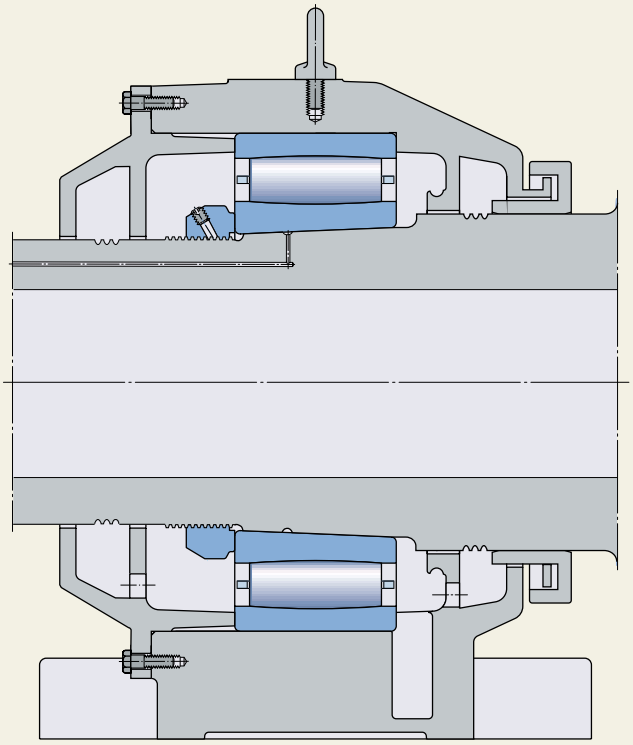

Bearing temperature/oil flow diagram

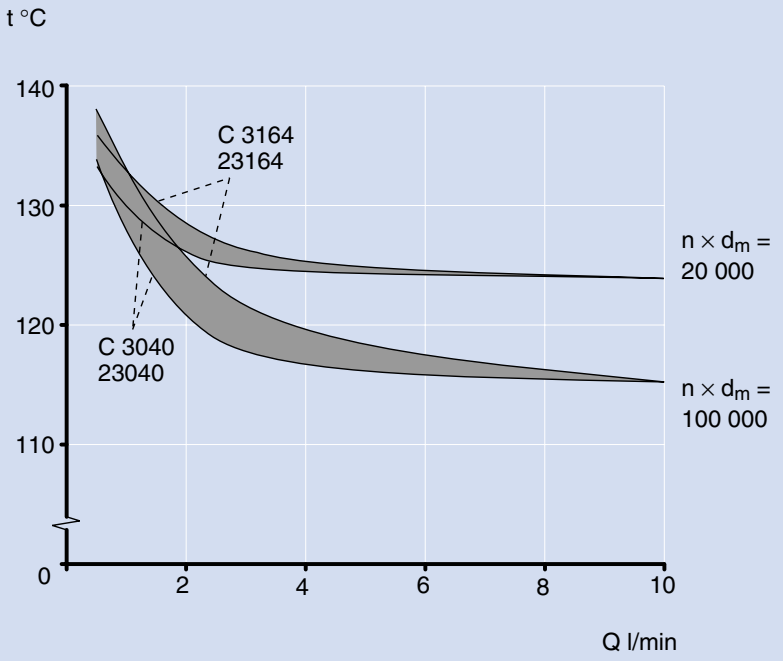

Example 18

Drying cylinder with steam temperature 165 °C (329 °F)

Machine data

Paper qualities	board, liner, fine
Roll position	dryer section
Paper speed	400–1 200 m/min (1 320–3 940 fpm)

Operating conditions for the bearings

Rotational speed	5–30 % of the speed rating
Ambient temperature	100 °C (212 °F)
Lubrication	circulating oil
Oil viscosity	ISO VG 220
Oil inlet temperature	60 °C (140 °F)
Journal insulation	yes

Lubrication guidelines

As drying cylinder bearings rotate at relatively low speeds and are subjected to high temperatures there will be metallic contact between rollers and raceways. This means that there is a risk of surface distress. To avoid this risk the circulating oil should have efficient AW additives and a viscosity ratio κ according to the guidelines on **page 207**.

General guidelines, as outlined under “Oil lubrication” (➔ **pages 95–97**), should also be taken into account.

Comments on the diagram

Bearing temperature depends on the bearing speed, applied load and external cooling or heating of the bearing arrangement. Therefore, the calculated bearing temperatures in the diagram are valid only when the bearing application and operating conditions are similar to those indicated here.

The calculations for this diagram have been made using an SKF computer program to give the inner ring temperature. The load at each speed corresponds to the minimum recommended bearing life of 200 000 h.

An oil flow of 0,5 l/min was common in the early machines with insulated journals. Such an oil flow gives a bearing temperature of around 100 °C.

The aim for this application is to find the optimum oil flow which gives a bearing temperature of around 90 °C.

The diagram shows that the influence of the oil quantity is considerable up to 2–3 l/min, but after that scarcely anything is gained by an increased oil flow except for large size bearings at high speeds.

If an ISO VG 320 oil is used instead the bearing temperature will increase a little but because the viscosity ratio κ will be higher than when using an ISO VG 220 oil its use will be beneficial.

Bearing application

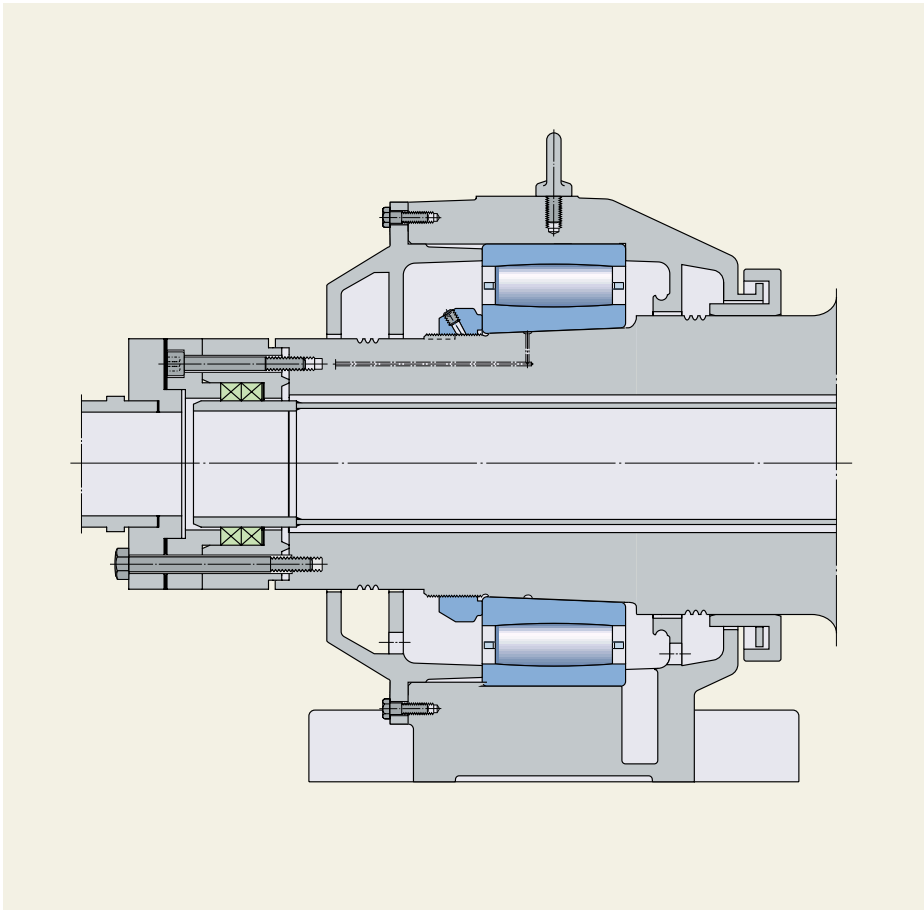

Bearing temperature/oil flow diagram

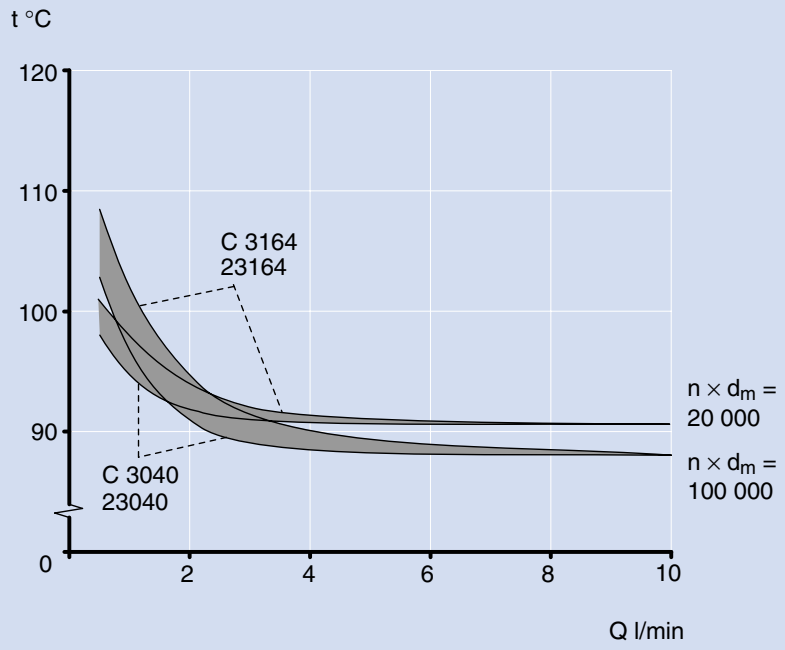

Example 19

Drying cylinder with steam temperature 190 °C (374 °F)

Machine data

Paper qualities	board, liner
Roll position	dryer section
Paper speed	400–1 300 m/min (1 320–4 270 fpm)

Operating conditions for the bearings

Rotational speed	5–30 % of the speed rating
Ambient temperature	100 °C (212 °F)
Lubrication	circulating oil
Oil viscosity	ISO VG 220
Oil inlet temperature	60 °C (140 °F)
Journal insulation	none

Lubrication guidelines

As drying cylinder bearings rotate at relatively low speeds and are subjected to high temperatures there will be metallic contact between rollers and raceways. This means that there is a risk of surface distress. To avoid this risk the circulating oil should have efficient AW additives and a viscosity ratio κ according to the guidelines on **page 207**.

General guidelines, as outlined under "Oil lubrication" (➔ **pages 95–97**), should also be taken into account.

Comments on the diagram

Bearing temperature depends on the bearing speed, applied load and external cooling or heating of the bearing arrangement. Therefore, the calculated bearing temperatures in the diagram are valid only when the bearing application and operating conditions are similar to those indicated here.

The calculations for this diagram have been made using an SKF computer program to give the inner ring temperature. The load at each speed corresponds to the minimum recommended bearing life of 200 000 h.

An oil flow of 0,5 l/min, which is common in old machines, gives a bearing temperature of around 155 °C.

At operating temperatures above 100 °C, it is not possible to fulfil the κ guidelines and some mineral oils have shown a strong tendency to carbonise. Therefore the recommendation for such applications is to improve the lubrication conditions as much as practically possible.

The diagram shows that the influence of the oil quantity is considerable up to 4 l/min, but after that scarcely anything is gained by an increased oil flow except for large size bearings at high speeds.

The best action is to introduce efficient journal insulation which gives a bearing temperature of about 95–100 °C (➔ **example 20**, **pages 144–145**). Changing to a synthetic oil is also beneficial.

Bearing application

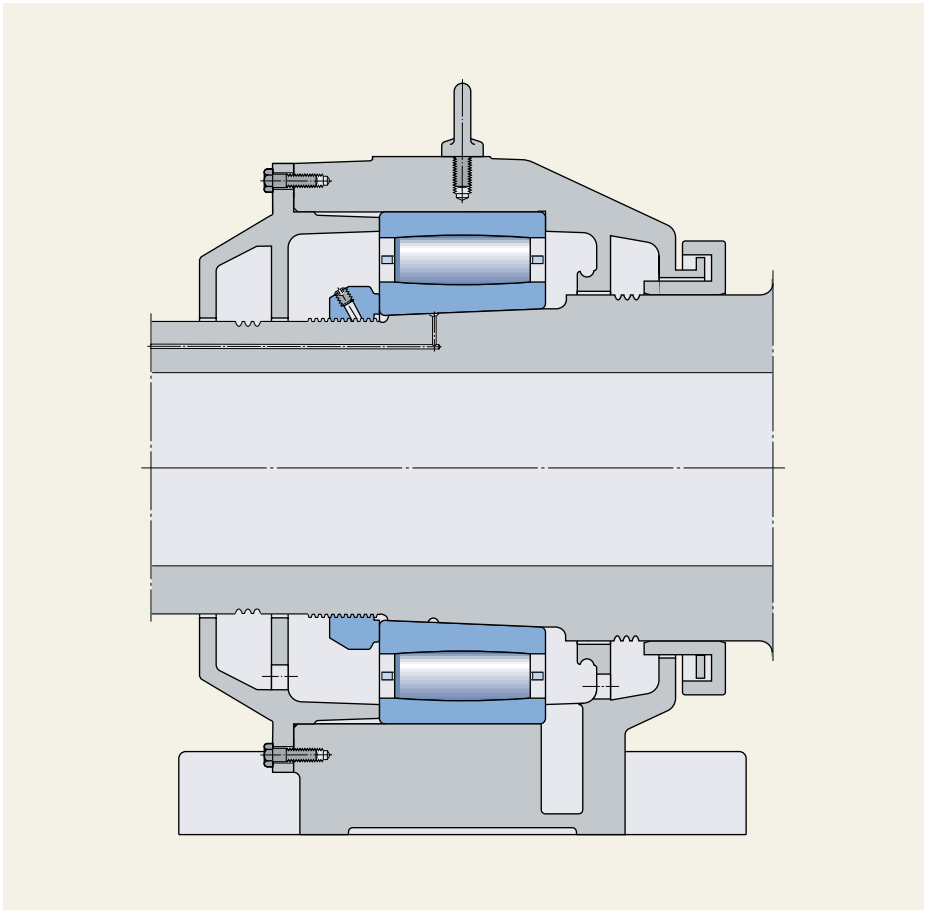

Bearing temperature/oil flow diagram

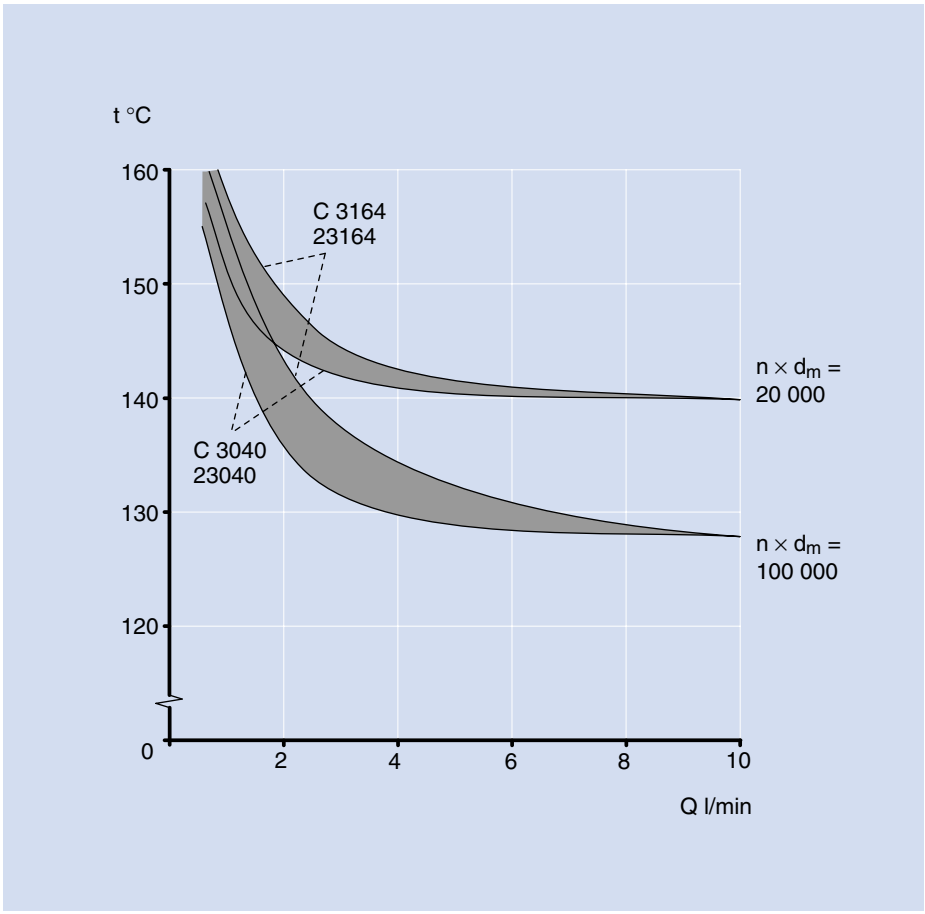

Example 20

Drying cylinder with steam temperature 190 °C (374 °F)

Machine data

Paper qualities	board, liner
Roll position	dryer section
Paper speed	400–1 300 m/min (1 320–4 270 fpm)

Operating conditions for the bearings

Rotational speed	5–30 % of the speed rating
Ambient temperature	100 °C (212 °F)
Lubrication	circulating oil
Oil viscosity	ISO VG 220
Oil inlet temperature	60 °C (140 °F)
Journal insulation	yes

Lubrication guidelines

As drying cylinder bearings rotate at relatively low speeds and are subjected to high temperatures there will be metallic contact between rollers and raceways. This means that there is a risk of surface distress. To avoid this risk the circulating oil should have efficient AW additives and a viscosity ratio k according to the guidelines on **page 207**.

General guidelines, as outlined under “Oil lubrication” (➔ **pages 95–97**), should also be taken into account.

Comments on the diagram

Bearing temperature depends on the bearing speed, applied load and external cooling or heating of the bearing arrangement. Therefore, the calculated bearing temperatures in the diagram are valid only when the bearing application and operating conditions are similar to those indicated here.

The calculations for this diagram have been made using an SKF computer program to give the inner ring temperature. The load at each speed corresponds to the minimum recommended bearing life of 200 000 h.

An oil flow of 0,5 l/min was common in the early machines with insulated journals. Such an oil flow gives a bearing temperature of around 115 °C. The aim for this application is to find the optimum oil flow which gives a bearing temperature of around 95–100 °C.

The diagram shows that the influence of the oil quantity is considerable up to 3–4 l/min, but after that scarcely anything is gained by an increased oil flow except for large size bearings at high speeds.

If an ISO VG 320 oil is used instead the bearing temperature will increase a little but because the viscosity ratio κ would be higher than when using an ISO VG 220 oil its use will be beneficial.

Bearing application

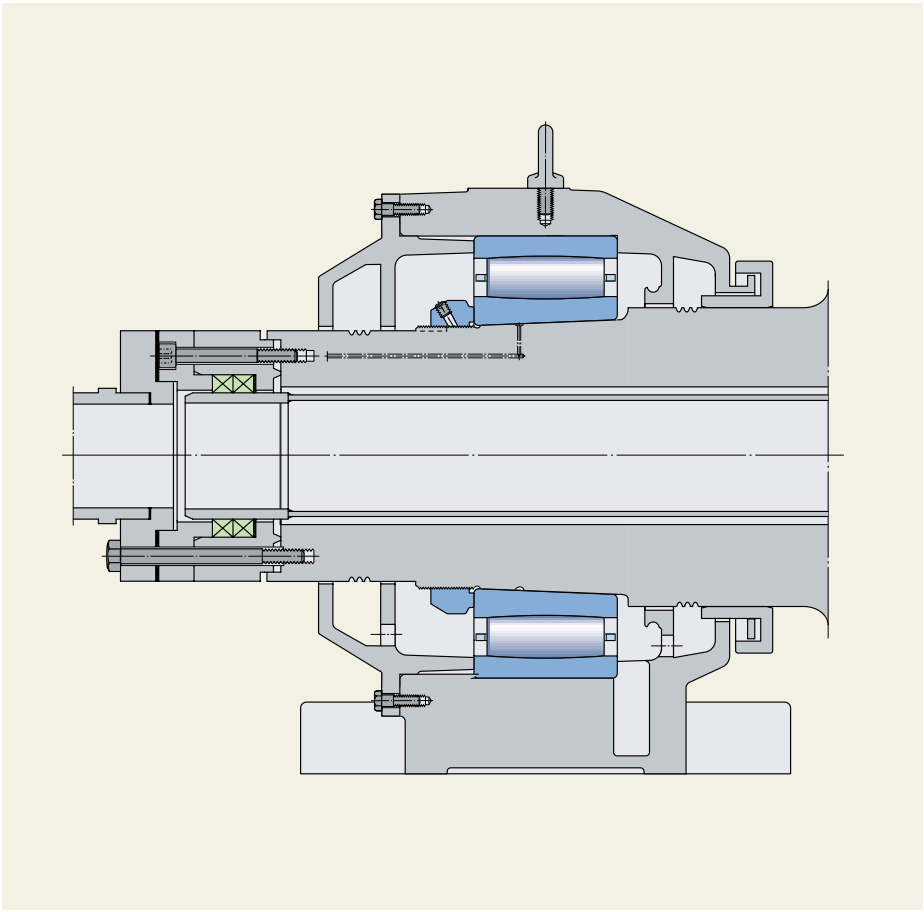

Bearing temperature/oil flow diagram

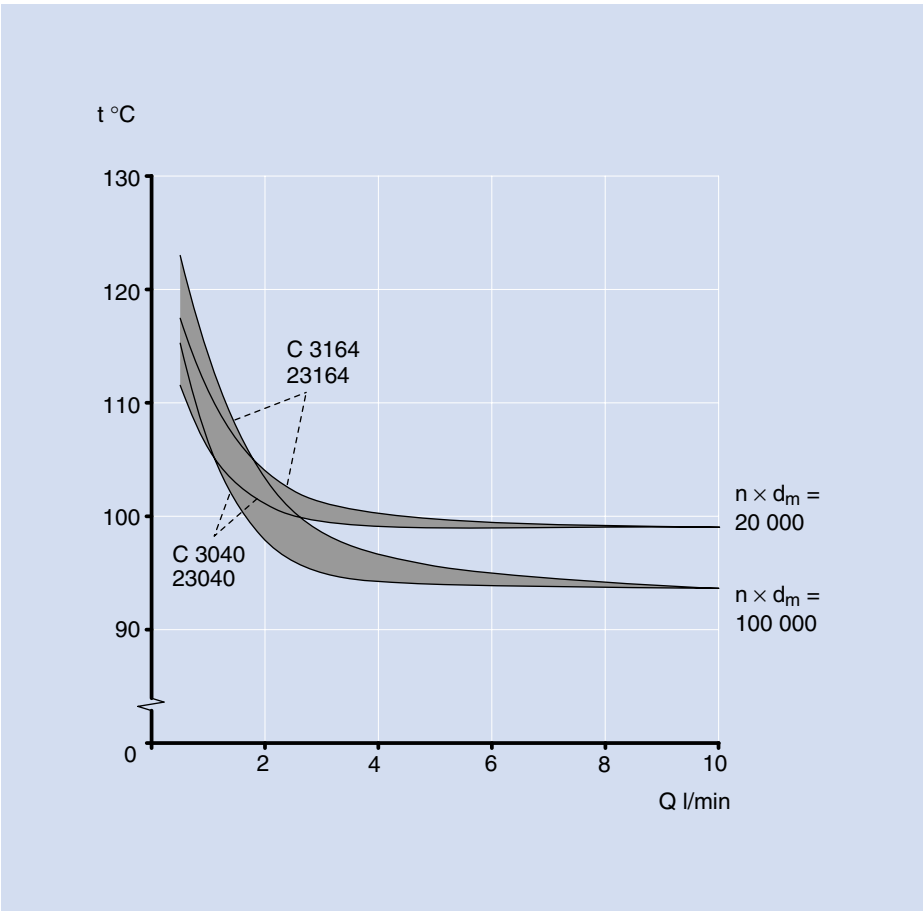

Example 21

Yankee suction press roll (oil)

Machine data

Paper qualities	board, tissue
Roll position	dryer section
Paper speed	400–2 200 m/min (1 320–7 220 fpm)

Operating conditions for the bearings

Rotational speed	10–200 % of the speed rating
Ambient temperature	45 °C (113 °F)
Lubrication	circulating oil
Oil viscosity	ISO VG 220
Oil inlet temperature	45 °C (113 °F)

Lubrication guidelines

As suction roll bearings are large and sometimes rotate at very high speeds there is a risk of smearing. To avoid smearing, the oil should have EP additives and the viscosity ratio κ should be according to the guidelines on **page 207**.

General guidelines, as outlined under “Oil lubrication” (➔ **pages 95–97**), should also be taken into account.

Comments on the diagram

Bearing temperature depends on the bearing speed, applied load and external cooling or heating of the bearing arrangement. Heat transfer from the housing, shaft and the foundation is largely dependent on the bearing application and operating conditions. Therefore, the oil flow in the diagram is valid only when the bearing application and operating conditions are similar to those indicated here.

The calculations for this diagram have been made using an SKF computer program to give the outer ring temperature. The load at each speed corresponds to the minimum recommended bearing life of 120 000 h.

The oil flow in the diagram is based on an ISO VG 220 oil and selected to fulfil two criteria: the κ guidelines and a bearing operating temperature of 75 °C. If an oil with lower viscosity than ISO VG 220 is used for these bearings then the oil flows must be increased. A thicker oil, e.g. ISO VG 320, is advantageous and will improve the lubrication conditions, but the bearing temperature will increase a little.

Note that the diagram shows minimum oil flow. Slightly higher oil flow values are acceptable and beneficial in most cases.

Bearing application

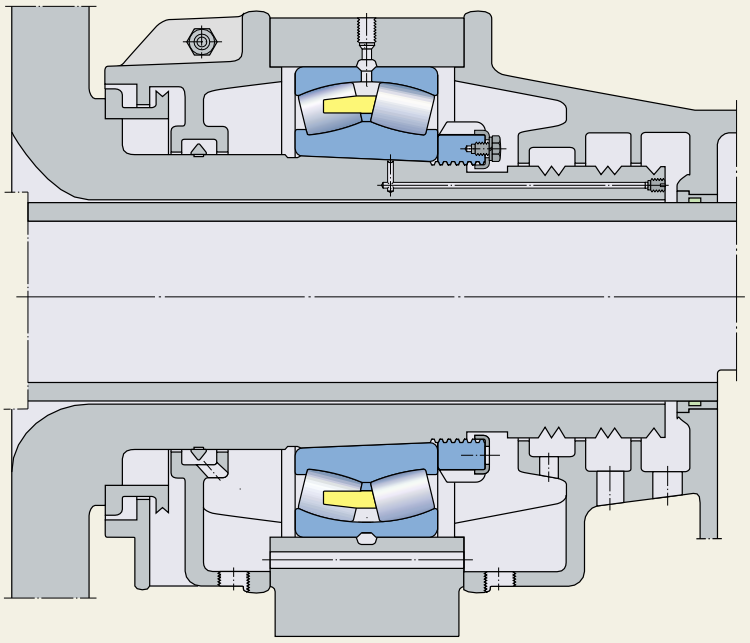

Oil flows for bearing temperatures 75 °C (167 °F)

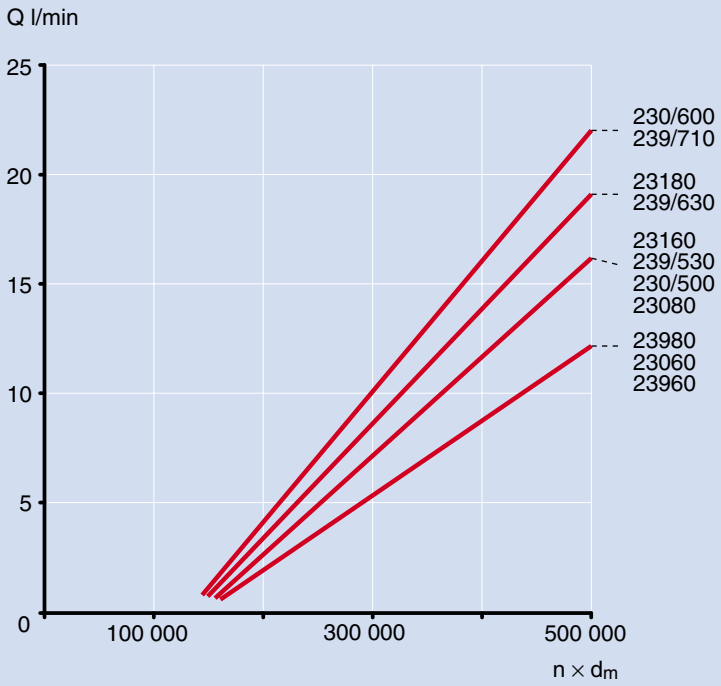

Example 22

Yankee cylinder with steam temperature 140 °C (284 °F) (oil bath)

Machine data

Paper qualities	board (old machines)
Roll position	dryer section
Paper speed	100–150 m/min (330–490 fpm)

Operating conditions for the bearings

Rotational speed	1–2 % of the speed rating
Ambient temperature	60 °C (140 °F)
Lubrication	oil bath
Oil viscosity	ISO VG 220–1 500
Journal insulation	none

Lubrication guidelines

As Yankee cylinder bearings in this example rotate at very low speeds and are subjected to high temperatures there will be metallic contact between rollers and raceways. This means that there is a risk of surface distress. To avoid this risk the lubricating oil should have efficient AW additives and a viscosity ratio κ according to the guidelines on **page 207**.

A synthetic oil is recommended, because mineral oils are not suitable at temperatures above 120 °C.

General guidelines, as outlined under “Oil lubrication” (➔ **pages 95–97**), should also be taken into account.

Comments on the diagram

Bearing temperature depends on the bearing speed, applied load and external cooling or heating of the bearing arrangement. Therefore, the calculated bearing temperatures in the diagram are valid only when the bearing application and operating conditions are similar to those indicated here.

The calculations for this diagram have been made using an SKF computer program to give the inner ring temperature. The load at each speed corresponds to the minimum recommended bearing life of 200 000 h. Note that the bearing temperature is lower at “high” speeds than at low speeds. The reason is that the increase in cooling via the rotating journal is higher than the increase in heat generation in the bearing.

At operating temperatures above 100 °C, it is not possible to fulfil the κ guidelines with commonly used ISO VG 220 oils.

The recommendation for this application is to improve the lubrication conditions as much as practically possible. The best remedy is to introduce an efficient journal insulation in combination with circulating oil lubrication. This gives a bearing temperature of 85 °C (➔ **example 24**, **pages 152–153**). Changing to an oil with higher viscosity than used for circulation systems is also beneficial.

Bearing application

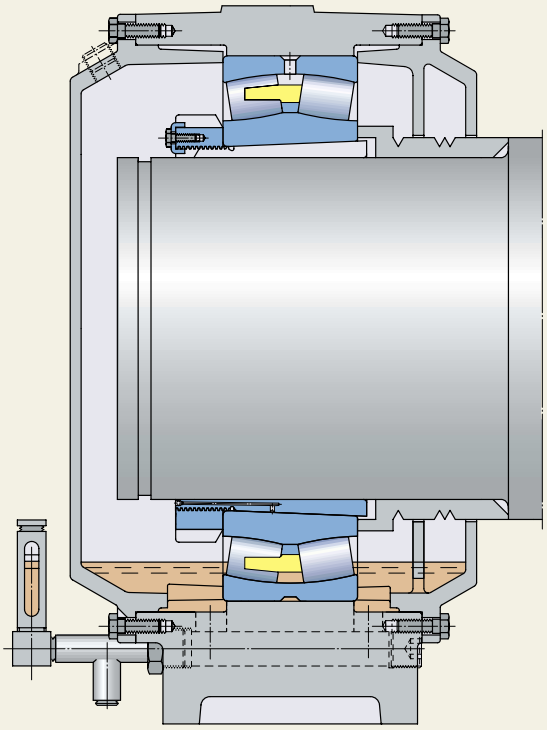

Bearing temperature/speed factor diagram

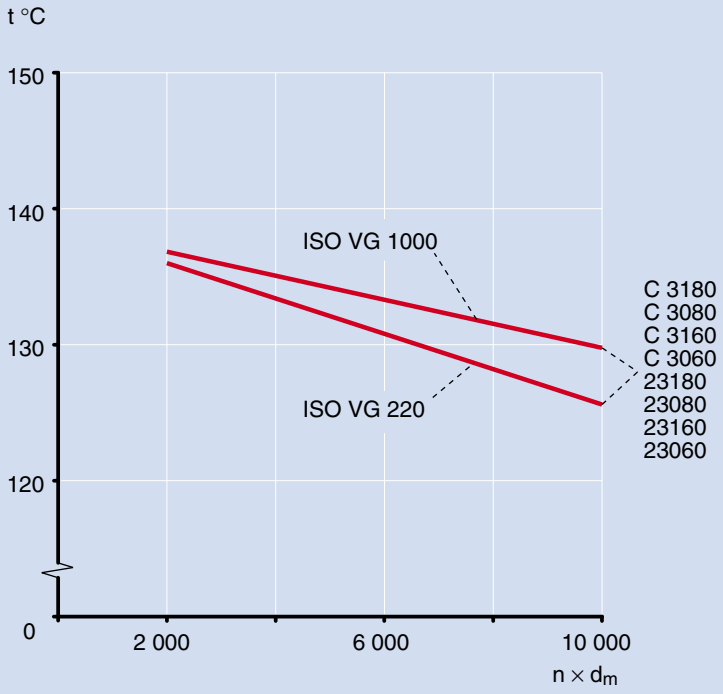

Example 23

Yankee cylinder with steam temperature 140 °C (284 °F)

Machine data

Paper qualities	board, tissue
Roll position	dryer section
Paper speed	100–1 000 m/min (330–3 300 fpm)

Operating conditions for the bearings

Rotational speed	1–20 % of the speed rating
Ambient temperature	60 °C (140 °F)
Lubrication	circulating oil
Oil viscosity	ISO VG 320 or 460
Oil inlet temperature	45 °C (113 °F)
Journal insulation	none

Lubrication guidelines

As Yankee cylinder bearings rotate at low speeds and are subjected to high temperatures there will be metallic contact between rollers and raceways. This means that there is a risk of surface distress. To avoid this risk the circulating oil should have efficient AW additives and a viscosity ratio κ according to the guidelines on **page 207**.

General guidelines, as outlined under “Oil lubrication” (→ **pages 95–97**), should also be taken into account.

Comments on the diagram

Bearing temperature depends on the bearing speed, applied load and external cooling or heating of the bearing arrangement. Therefore, the calculated bearing temperatures in the diagram are valid only when the bearing application and operating conditions are similar to those indicated here.

The calculations for this diagram are made at SKF with a computer program that indicates the inner ring temperature. The load at each speed corresponds to the minimum recommended bearing life of 200 000 h.

The bearing operating temperature will be above 110 °C also at very high oil flows. At operating temperatures above 100 °C, it is not possible to fulfil the κ guidelines and some mineral oils have shown a strong tendency to carbonise. Therefore the recommendation for such applications is to improve the lubrication conditions as much as practically possible.

The diagram shows that the influence of the oil quantity is considerable up to 4–5 l/min, but after that scarcely anything is gained by an increased oil flow except for large size bearings at high speeds.

The best action is to introduce efficient journal insulation which gives a bearing temperature of about 80–85 °C (→ **example 24**). Changing to a synthetic oil is also beneficial.

Bearing application

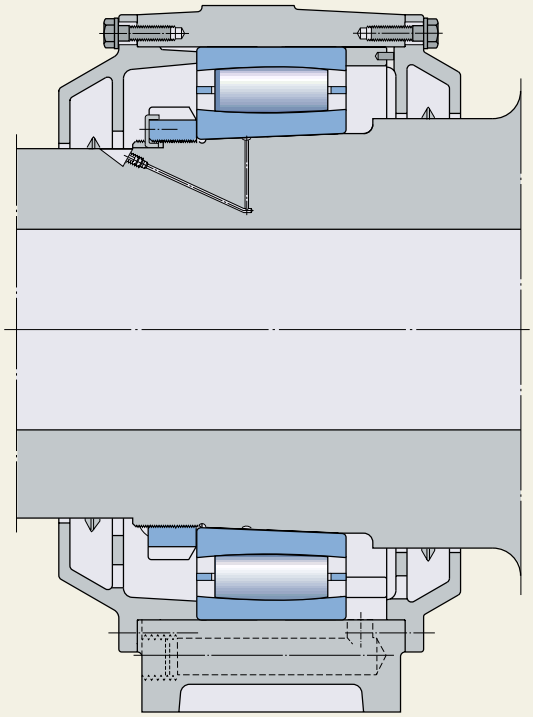

Bearing temperature/oil flow diagram

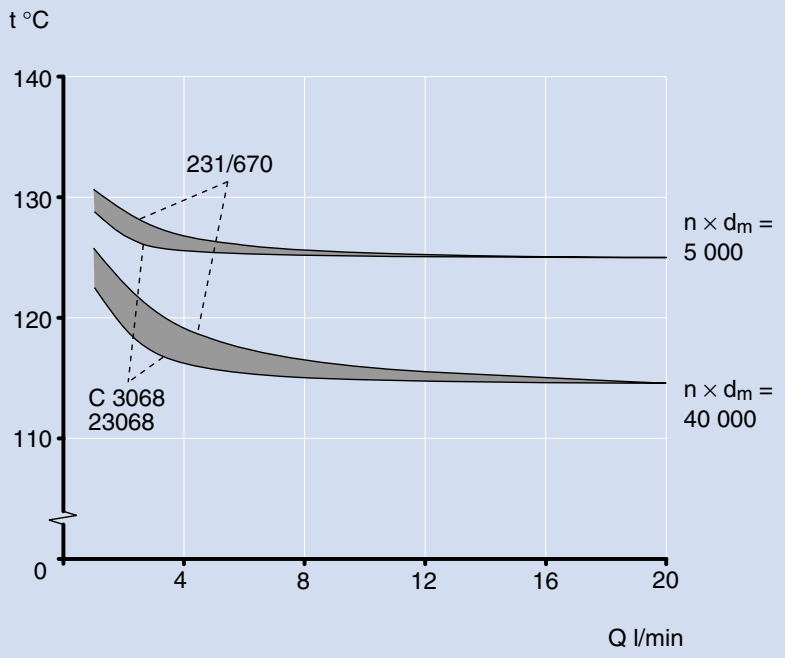

Example 24

Yankee cylinder with steam temperature 140 °C (284 °F)

Machine data

Paper qualities	board, tissue
Roll position	dryer section
Paper speed	400–1 000 m/min (1 320–3 300 fpm)

Operating conditions for the bearings

Rotational speed	5–20 % of the speed rating
Ambient temperature	60 °C (140 °F)
Lubrication	circulating oil
Oil viscosity	ISO VG 320 or 460
Oil inlet temperature	45 °C (113 °F)
Journal insulation	yes

Lubrication guidelines

As Yankee cylinders bearings rotate at relatively low speeds and are subjected to high temperatures there will be metallic contact between rollers and raceways. This means that there is a risk of surface distress. To avoid this risk the circulating oil should have efficient AW additives and a viscosity ratio κ according to the guidelines on **page 207**.

General guidelines, as outlined under “Oil lubrication” (→ **pages 95–97**), should also be taken into account.

Comments on the diagram

Bearing temperature depends on the bearing speed, applied load and external cooling or heating of the bearing arrangement. Therefore, the calculated bearing temperatures in the diagram are valid only when the bearing application and operating conditions are similar to those indicated here.

The calculations for this diagram have been made using an SKF computer program to give the inner ring temperature. The load at each speed corresponds to the minimum recommended bearing life of 200 000 h.

An oil flow of 1–2 l/min was sometimes used in the early machines with insulated journals. Such an oil flow gives a bearing temperature around 90 °C.

The aim for this application is to find the optimum oil flow which gives a bearing temperature of around 80–85 °C.

The diagram shows that the influence of the oil quantity is considerable up to 4–6 l/min, but after that scarcely anything is gained by an increased oil flow except for large size bearings at high speeds.

Bearing application

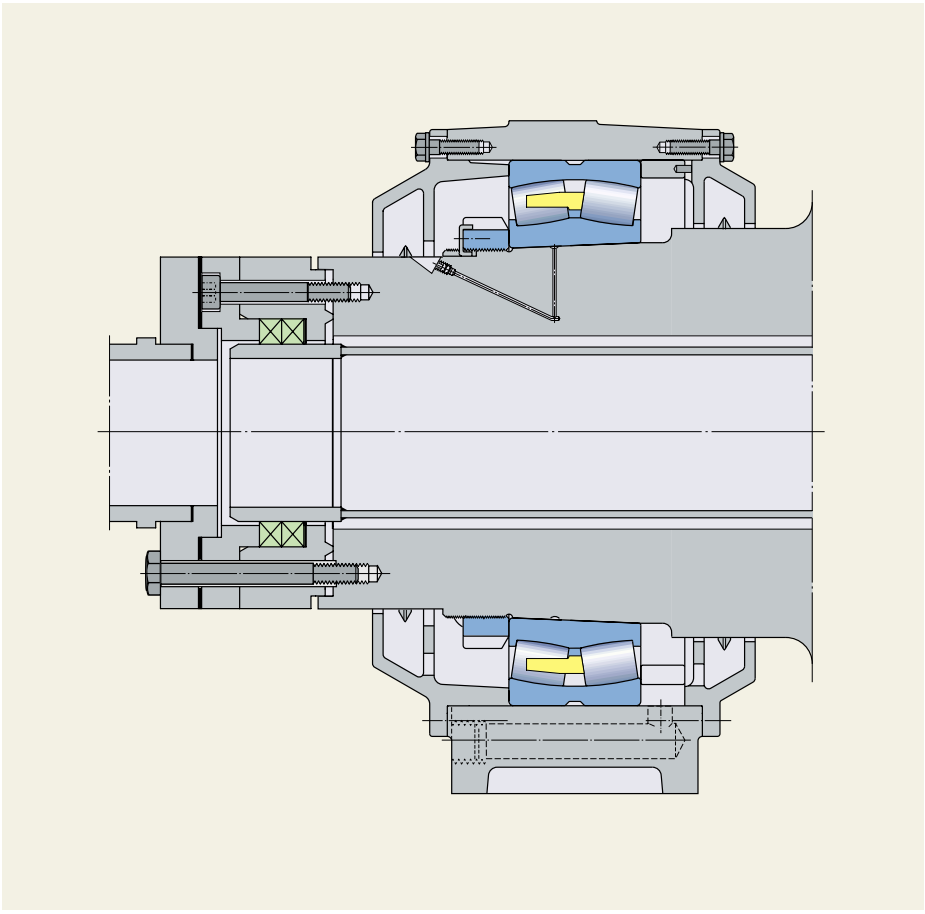

Bearing temperature/oil flow diagram

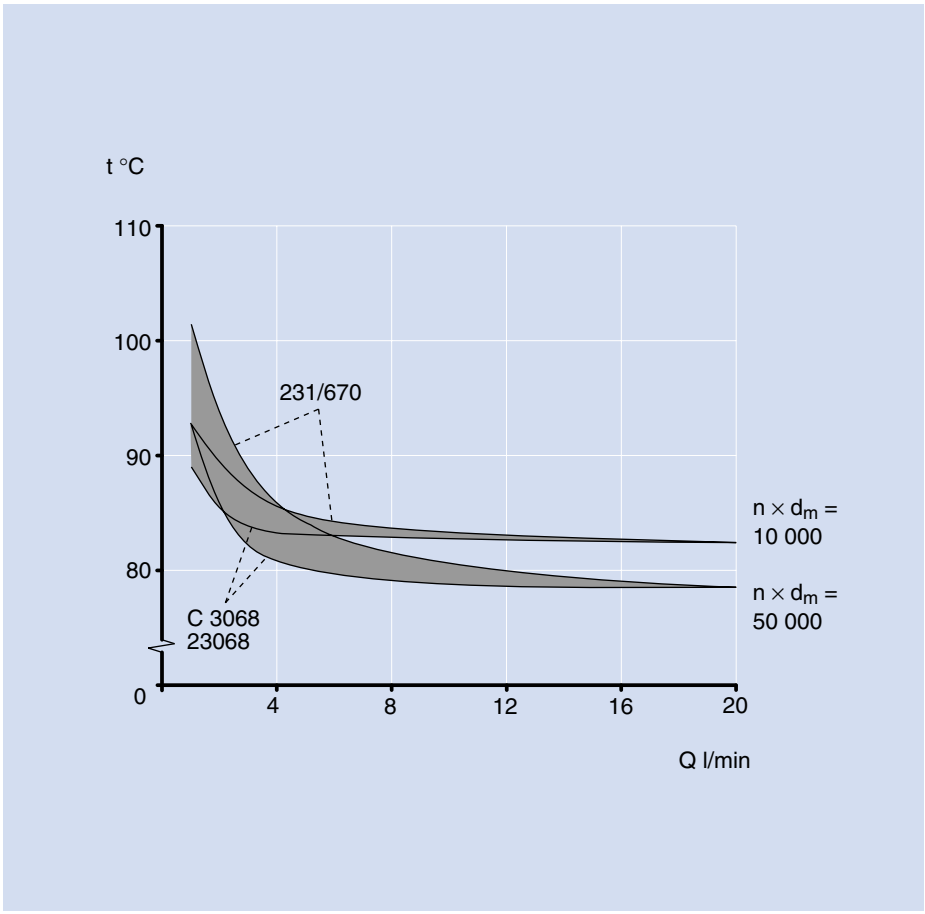

Example 25

Yankee cylinder with steam temperature 165 °C (329 °F)

Machine data

Paper qualities	tissue, board
Roll position	dryer section
Paper speed	400–1 500 m/min (1 320–4 920 fpm)

Operating conditions for the bearings

Rotational speed	5–30 % of the speed rating
Ambient temperature	60 °C (140 °F)
Lubrication	circulating oil
Oil viscosity	ISO VG 320 or 460
Oil inlet temperature	45 °C (113 °F)
Journal insulation	none

Lubrication guidelines

As Yankee cylinder bearings rotate at relatively low speeds and are subjected to high temperatures there will be metallic contact between rollers and raceways. This means that there is a risk of surface distress. To avoid this risk the circulating oil should have efficient AW additives and a viscosity ratio κ according to the guidelines on **page 207**.

General guidelines, as outlined under “Oil lubrication” (**➔ pages 95–97**), should also be taken into account.

Comments on the diagram

Bearing temperature depends on the bearing speed, applied load and external cooling or heating of the bearing arrangement. Therefore, the calculated bearing temperatures in the diagram are valid only when the bearing application and operating conditions are similar to those indicated here.

The calculations for this diagram have been made using an SKF computer program to give the inner ring temperature. The load at each speed corresponds to the minimum recommended bearing life of 200 000 h.

An oil flow of 2 l/min, which is sometimes used for old machines, gives a bearing temperature of around 135 °C.

At operating temperatures above 100 °C, it is not possible to fulfil the κ guidelines and some mineral oils have shown a strong tendency to carbonise. Therefore the recommendation for such applications is to improve the lubrication conditions as much as practically possible.

The diagram shows that the influence of the oil quantity is considerable up to 5–7 l/min, but after that scarcely anything is gained by an increased oil flow except for large size bearings at high speeds.

The best action is to introduce efficient journal insulation which gives a bearing temperature of about 90 °C **(➔ example 26**, **pages 156–157)**. Changing to a synthetic oil is also beneficial.

Bearing application

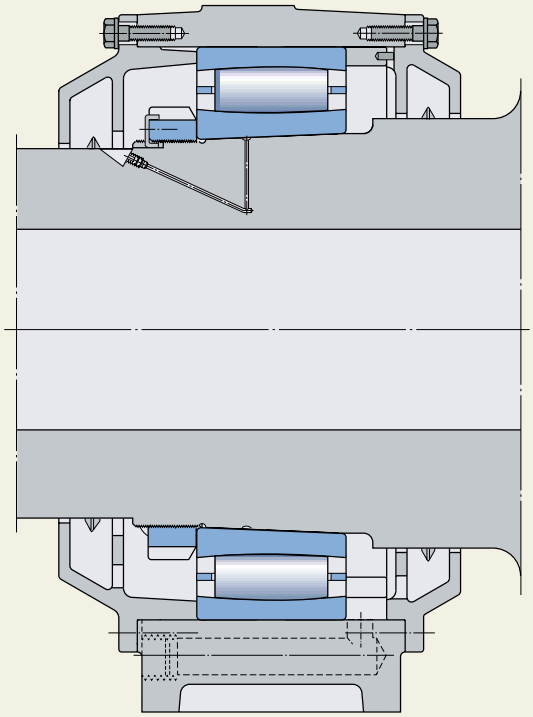

Bearing temperature/oil flow diagram

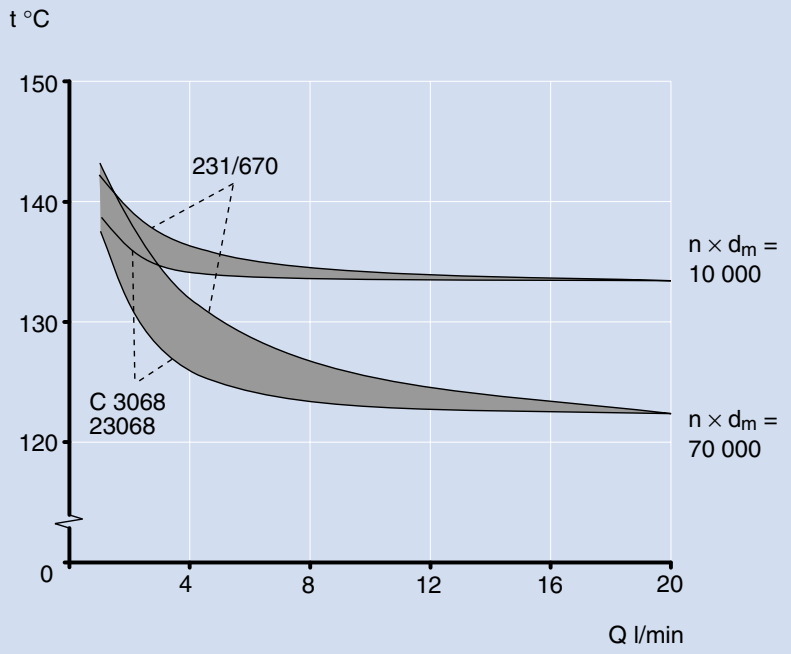

Example 26

Yankee cylinder with steam temperature 165 °C (329 °F)

Machine data

Paper qualities	tissue, board
Roll position	dryer section
Paper speed	400–2 200 m/min (1 320–7 220 fpm)

Operating conditions for the bearings

Rotational speed	5–35 % of the speed rating
Ambient temperature	60 °C (140 °F)
Lubrication	circulating oil
Oil viscosity	ISO VG 320 or 460
Oil inlet temperature	45 °C (113 °F)
Journal insulation	yes

Lubrication guidelines

As Yankee cylinder bearings rotate at relatively low speeds and are subjected to high temperatures there will be metallic contact between rollers and raceways. This means that there is a risk of surface distress. To avoid this risk the circulating oil should have efficient AW additives and a viscosity ratio κ according to the guidelines on **page 207**.

General guidelines, as outlined under “Oil lubrication” (➔ **pages 95–97**), should also be taken into account.

Comments on the diagram

Bearing temperature depends on the bearing speed, applied load and external cooling or heating of the bearing arrangement.Therefore, the calculated bearing temperatures in the diagram are valid only when the bearing application and operating conditions are similar to those indicated here.

The calculations for this diagram have been made using an SKF computer program to give the inner ring temperature. The load at each speed corresponds to the minimum recommended bearing life of 200 000 h.

An oil flow of 2 l/min was sometimes used in the early machines with insulated journals. Such an oil flow gives a bearing temperature around 100 °C. If the bearing operating temperature is above 100 °C it is impossible to fulfil the κ guidelines. The aim for this application is to find the optimum oil flow which gives a bearing temperature below 90 °C.

The diagram shows that the influence of the oil quantity is considerable up to 5–7 l/min, but after that scarcely anything is gained by an increased oil flow except for large size bearings at high speeds.

Bearing application

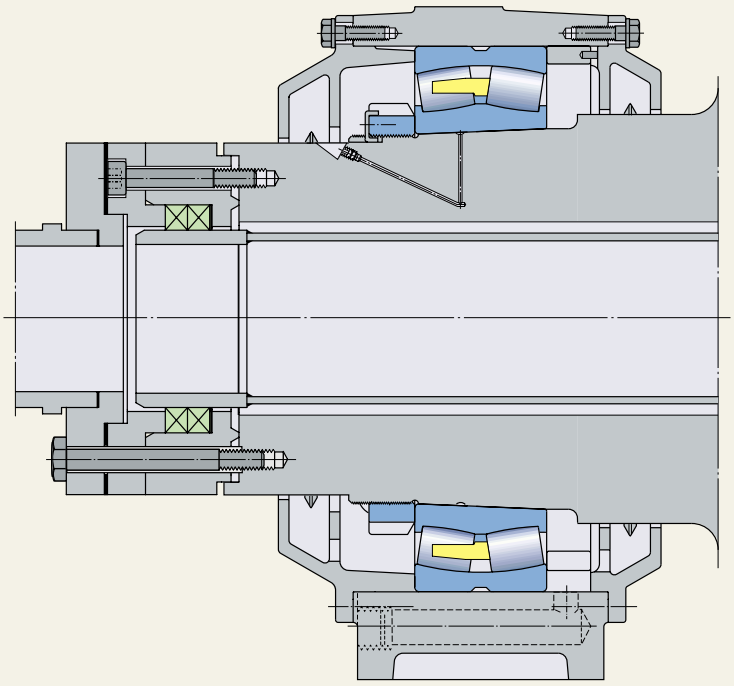

Bearing temperature/oil flow diagram

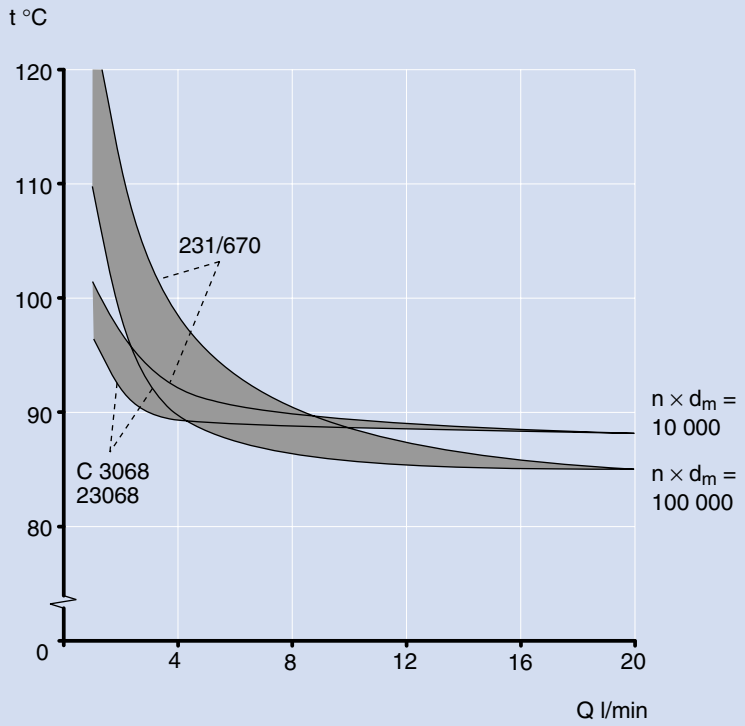

Example 27

Yankee cylinder with steam temperature 190 °C (374 °F)

Machine data

Paper qualities	tissue, board
Roll position	dryer section
Paper speed	400–1 500 m/min (1 320–4 920 fpm)

Operating conditions for the bearings

Rotational speed	5–30 % of the speed rating
Ambient temperature	60 °C (140 °F)
Lubrication	circulating oil
Oil viscosity	ISO VG 320 or 460
Oil inlet temperature	45 °C (113 °F)
Journal insulation	none

Lubrication guidelines

As Yankee cylinder bearings rotate at relatively low speeds and are subjected to high temperatures there will be metallic contact between rollers and raceways. This means that there is a risk of surface distress. To avoid this risk the circulating oil should have efficient AW additives and a viscosity ratio κ according to the guidelines on **page 207**.

General guidelines, as outlined under “Oil lubrication” (→ **pages 95–97**), should also be taken into account.

Comments on the diagram

Bearing temperature depends on the bearing speed, applied load and external cooling or heating of the bearing arrangement. Therefore, the calculated bearing temperatures in the diagram are valid only when the bearing application and operating conditions are similar to those indicated here.

The calculations for this diagram have been made using an SKF computer program to give the inner ring temperature. The load at each speed corresponds to the minimum recommended bearing life of 200 000 h.

An oil flow of 2–3 l/min, which is common in old machines, gives a bearing temperature of around 155 °C.

At operating temperatures above 100 °C, it is not possible to fulfil the κ guidelines and some mineral oils have shown a strong tendency to carbonise. Therefore the recommendation for such applications is to improve the lubrication conditions as much as practically possible.

The diagram shows that the influence of the oil quantity is considerable up to 6–8 l/min, but after that scarcely anything is gained by an increased oil flow except for large size bearings at high speeds.

The best action is to introduce efficient journal insulation which gives a bearing temperature of about 95 °C (→ **example 28**, **pages 160–161**). Changing to a synthetic oil is also beneficial.

Bearing application

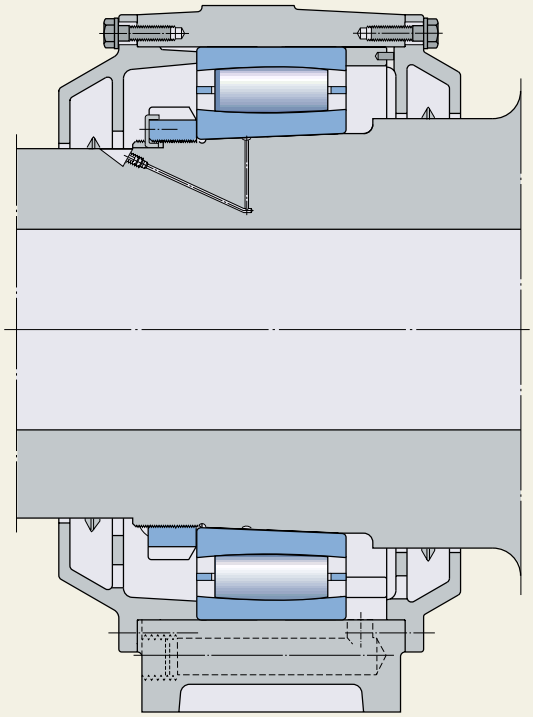

Bearing temperature/oil flow diagram

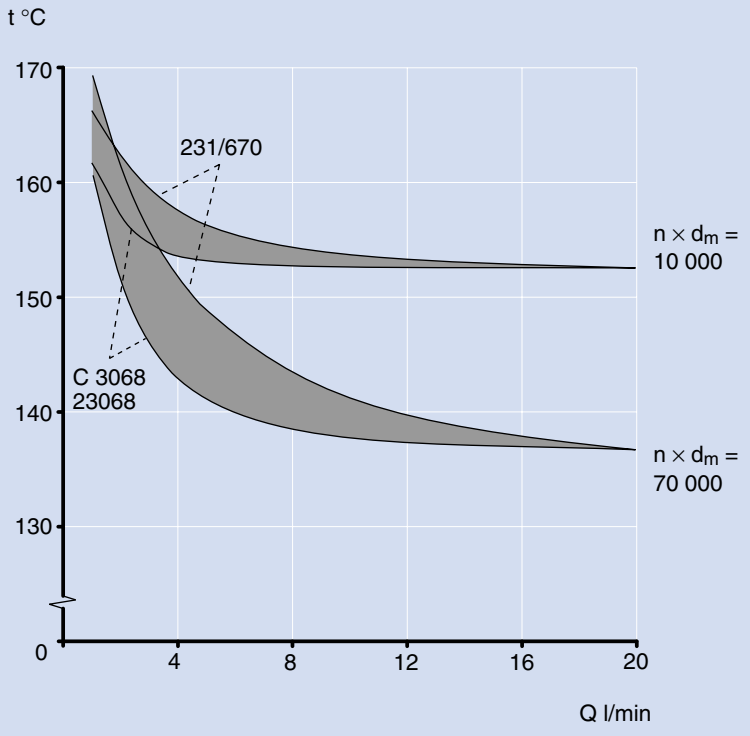

Example 28

Yankee cylinder with steam temperature 190 °C (374 °F)

Machine data

Paper qualities	tissue, board
Roll position	dryer section
Paper speed	400–2 200 m/min (1 320–7 220 fpm)

Operating conditions for the bearings

Rotational speed	5–35 % of the speed rating
Ambient temperature	60 °C (140 °F)
Lubrication	circulating oil
Oil viscosity	ISO VG 320 or 460
Oil inlet temperature	45 °C (113 °F)
Journal insulation	yes

Lubrication guidelines

As Yankee cylinder bearings rotate at relatively low speeds and are subjected to high temperatures there will be metallic contact between rollers and raceways. This means that there is a risk of surface distress. To avoid this risk the circulating oil should have efficient AW additives and a viscosity ratio κ according to the guidelines on **page 207**.

General guidelines, as outlined under “Oil lubrication” (➔ **pages 95–97**), should also be taken into account.

Comments on the diagram

Bearing temperature depends on the bearing speed, applied load and external cooling or heating of the bearing arrangement. Therefore, the calculated bearing temperatures in the diagram are valid only when the bearing application and operating conditions are similar to those indicated here.

The calculations for this diagram have been made using an SKF computer program to give the inner ring temperature. The load at each speed corresponds to the minimum recommended bearing life of 200 000 h.

An oil flow of 2–3 l/min was common in the early machines with insulated journals. Such an oil flow gives a bearing temperature of around 110 °C. If the bearing operating temperature is above 100 °C it is impossible to fulfil the κ guidelines. The aim for this application is to find the optimum oil flow which gives a bearing temperature of 90–95 °C.

The diagram shows that the influence of the oil quantity is considerable up to 6–8 l/min, but after that scarcely anything is gained by an increased oil flow except for large size bearings at high speeds.

Bearing application

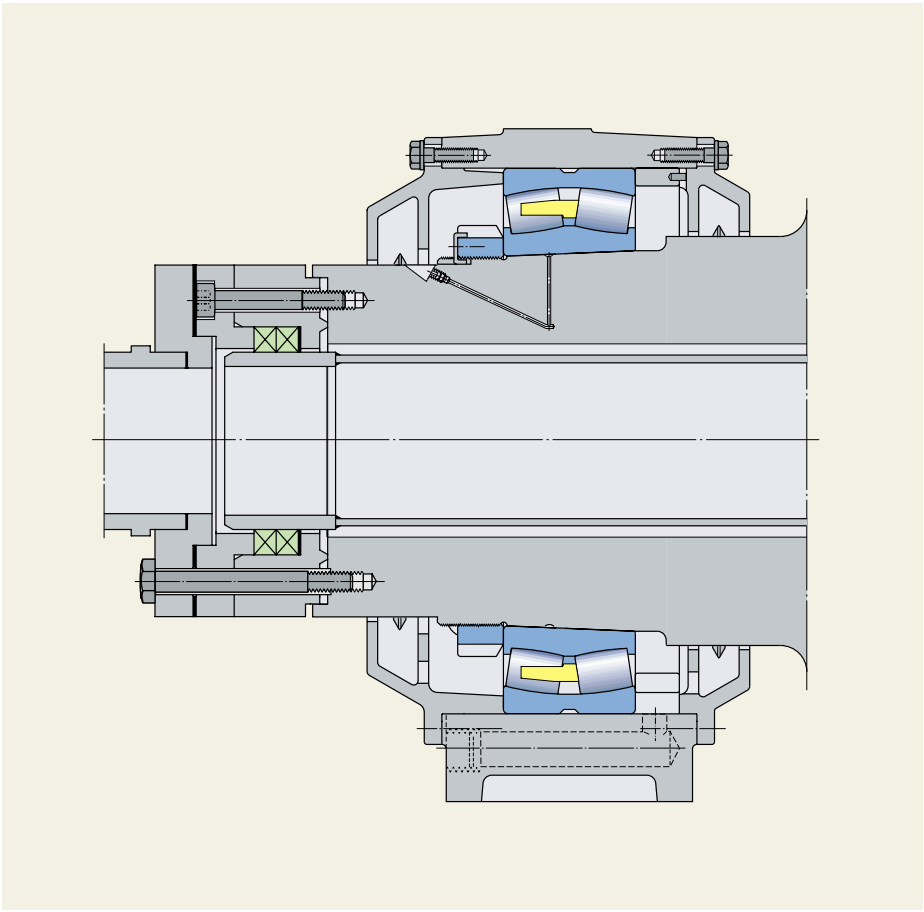

Bearing temperature/oil flow diagram

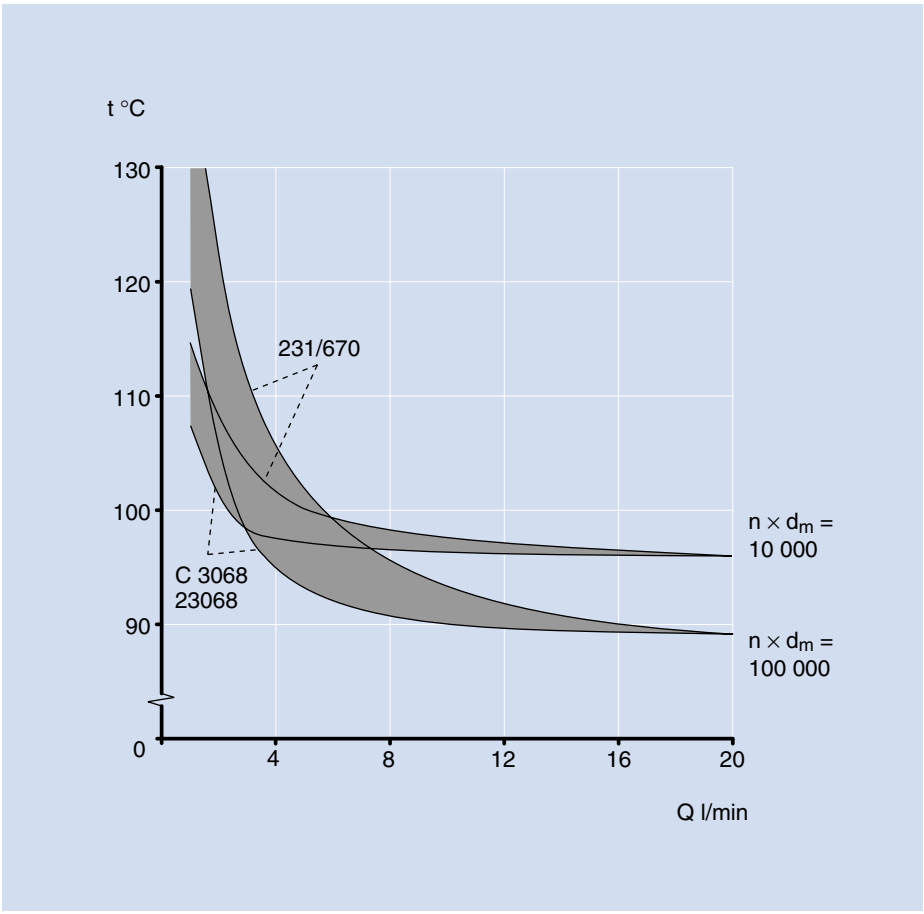

Example 29

Paper guide roll (grease)

Machine data

Paper qualities	board, liner, fine, newsprint
Roll position	after dryer section
Paper speed	100–1 000 m/min (330–3 300 fpm)

Operating conditions for the bearings

Rotational speed	5–35 % of the speed rating
Ambient temperature	45 °C (113 °F)
Lubrication	grease
Base oil viscosity	175 mm^2/s at 40 °C

Lubrication guidelines

SKF experience is that a grease with a base oil viscosity of minimum 175 mm^2/s has good lubrication performance in this position. Operating conditions for grease lubricated bearings in the forming section are more severe than in this example. Therefore, the grease selected for the forming section can also be used here.

General guidelines, as outlined under “Grease lubrication” (➔ **pages 91–94**), should also be taken into account.

Comments on the diagram

Bearing temperature depends on the bearing speed, applied load and external cooling or heating of the bearing arrangement. Heat transfer from the housing, shaft and the foundation is largely dependent on the bearing application and operating conditions. Therefore, the calculated bearing temperatures in this example are valid only when the bearing application and operating conditions are similar to those indicated here.

The calculations for this diagram have been made using an SKF computer program to give the outer ring temperature at different speeds. The load at each speed corresponds with the recommended bearing life of 120 000 h.

The highest bearing temperature shown in the diagram is 75 °C as it is customary to use oil lubrication at higher temperatures.

Bearing application

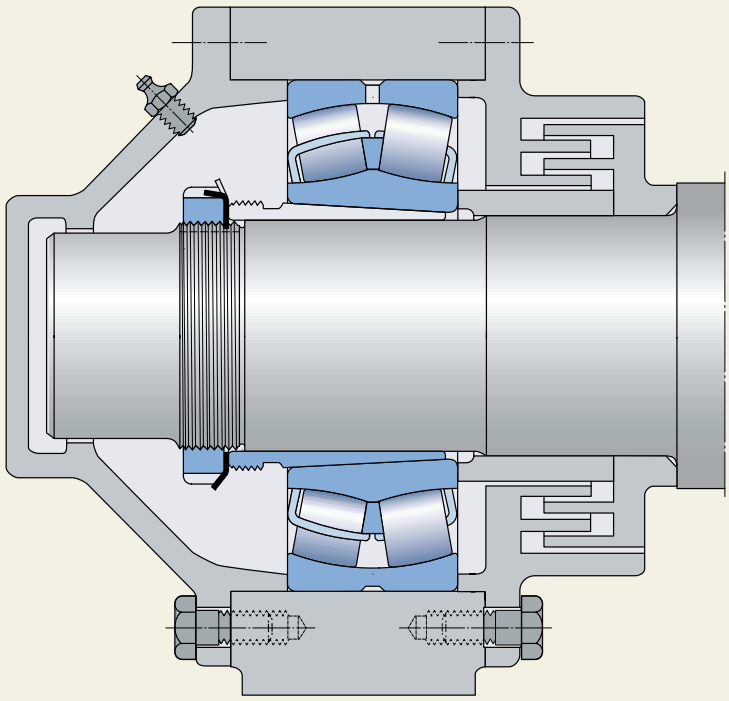

Bearing temperature/speed factor diagram

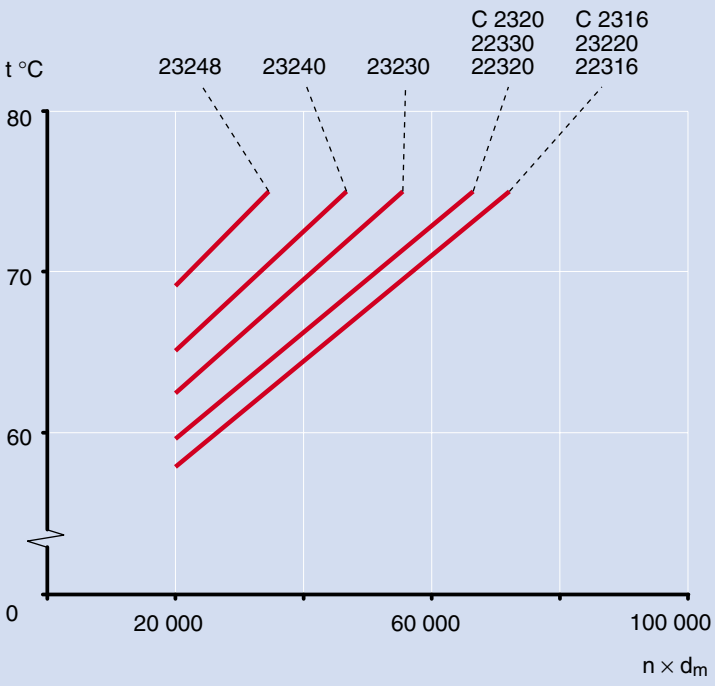

Example 30

Paper guide roll (oil)

Machine data

Paper qualities	all
Roll position	after dryer section
Paper speed	400–2 200 m/min (1 320–7 220 fpm)

Operating conditions for the bearings

Rotational speed	20–60 % of the speed rating
Ambient temperature	45 °C (113 °F)
Lubrication	circulating oil
Oil viscosity	ISO VG 220
Oil inlet temperature	50 °C (122 °F)

Lubrication guidelines

Paper guide roll bearings have better operating conditions than drying cylinder bearings which are lubricated from the same circulating oil system. Therefore, the lubricant properties should be based on the operating conditions for drying cylinder bearings. However, the paper guide roll bearings should have an oil flow giving a viscosity ratio κ according to the guidelines on **page 207**.

General guidelines, as outlined under “Oil lubrication” (➔ **pages 95–97**), should also be taken into account.

Comments on the diagram

Bearing temperature depends on the bearing speed, applied load and external cooling or heating of the bearing arrangement. Heat transfer from the housing, shaft and the foundation is largely dependent on the bearing application and operating conditions. Therefore, the calculated bearing temperatures in the diagram are valid only when the bearing application and operating conditions are similar to those indicated here.

The calculations for this diagram have been made using an SKF computer program to give the outer ring temperature. The load at each speed corresponds to the recommended bearing life of 200 000 h. The oil flow in the diagram is based on an ISO VG 220 oil and selected to fulfil two criteria: the κ guidelines and a bearing operating temperature of 75 °C.

If an oil with lower viscosity than ISO VG 220 is used the flow must be increased in order to reach the same κ value. A thicker oil, e.g. ISO VG 320, is advantageous and will improve the lubrication conditions, but the bearing temperature will increase a little.

Note that the diagram shows minimum oil flow. Slightly higher oil flow values are acceptable and beneficial in most cases.

Bearing application

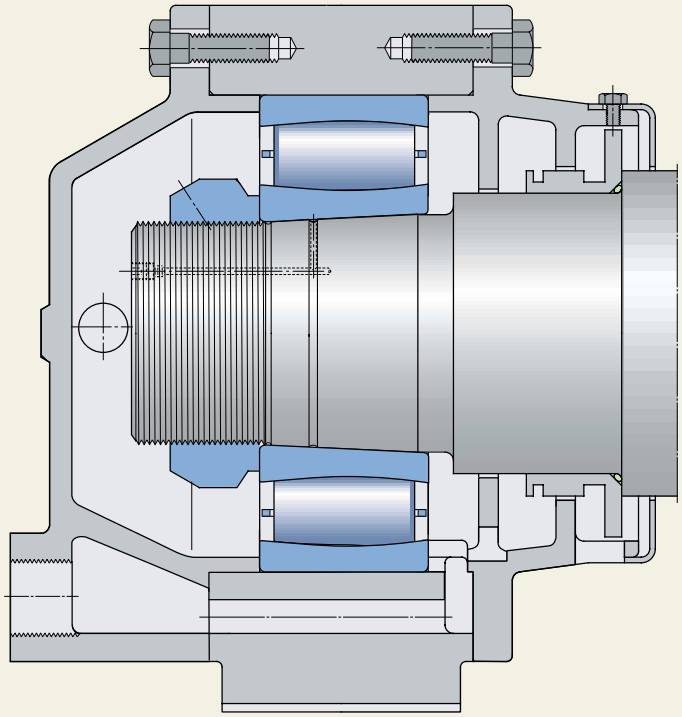

Oil flows for bearing temperature 75 °C (167 °F)

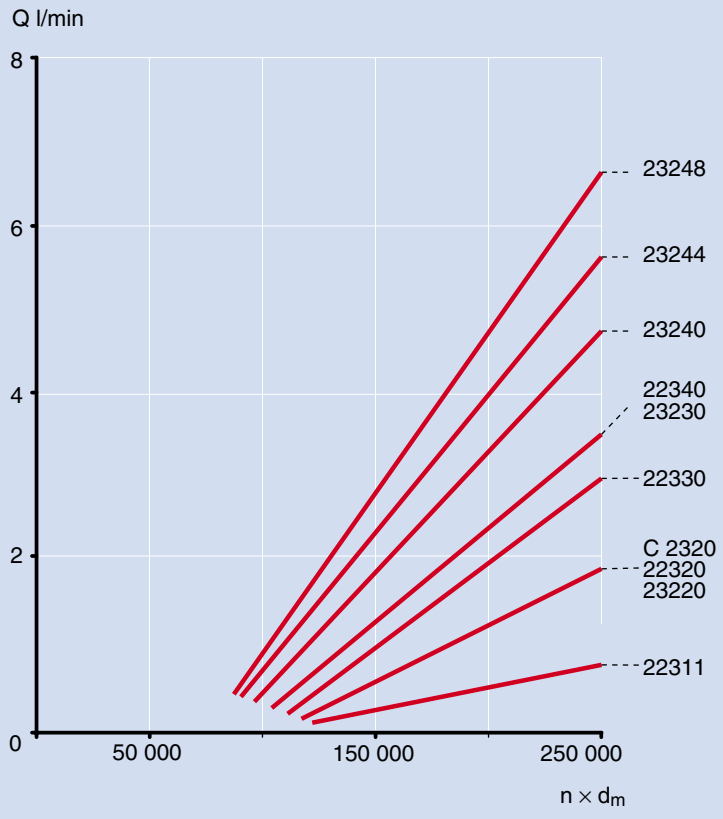

Example 31

Calender roll, plain, unheated (oil bath)

Machine data

Paper qualities	board, fine
Roll position	machine calender (old machines)
Paper speed	100–700 m/min (330–2 300 fpm)

Operating conditions for the bearings

Rotational speed	5–40 % of the speed rating
Ambient temperature	45 °C (113 °F)
Lubrication	oil bath
Oil viscosity	ISO VG 220

Lubrication guidelines

The bearings in this example have relatively good lubrication conditions. However, bearings running at low speeds will have metal-to-metal contact between rollers and raceways. This gives a risk of surface distress. To avoid this risk the lubricating oil should have efficient AW additives and a viscosity ratio κ according to the guidelines on **page 207**.

General guidelines, as outlined under “Oil lubrication” (→ **pages 95–97**), should also be taken into account.

Comments on the diagram

Bearing temperature depends on the bearing speed, applied load and external cooling or heating of the bearing arrangement. Therefore, the calculated bearing temperatures in the diagram are valid only when the bearing application and operating conditions are similar to those indicated here.

The calculations for this diagram have been made using an SKF computer program to give the outer ring temperature. The load at each speed corresponds to the minimum recommended bearing life of 120 000 h.

In this example oil bath lubrication fulfils the SKF lubrication guidelines regarding the viscosity ratio κ but not the guidelines for lubricant cleanliness. Therefore, the recommendation for this application is to improve the lubricant cleanliness.

Oil cleanliness can be improved by various means e.g. by improved seals for the bearing housing, decreased time between the oil changes or the introduction of an oil circulation system with filters and water extractors. However, the cost for these can sometimes be higher than the gains from increased machine availability and decreased bearing consumption.

Bearing application

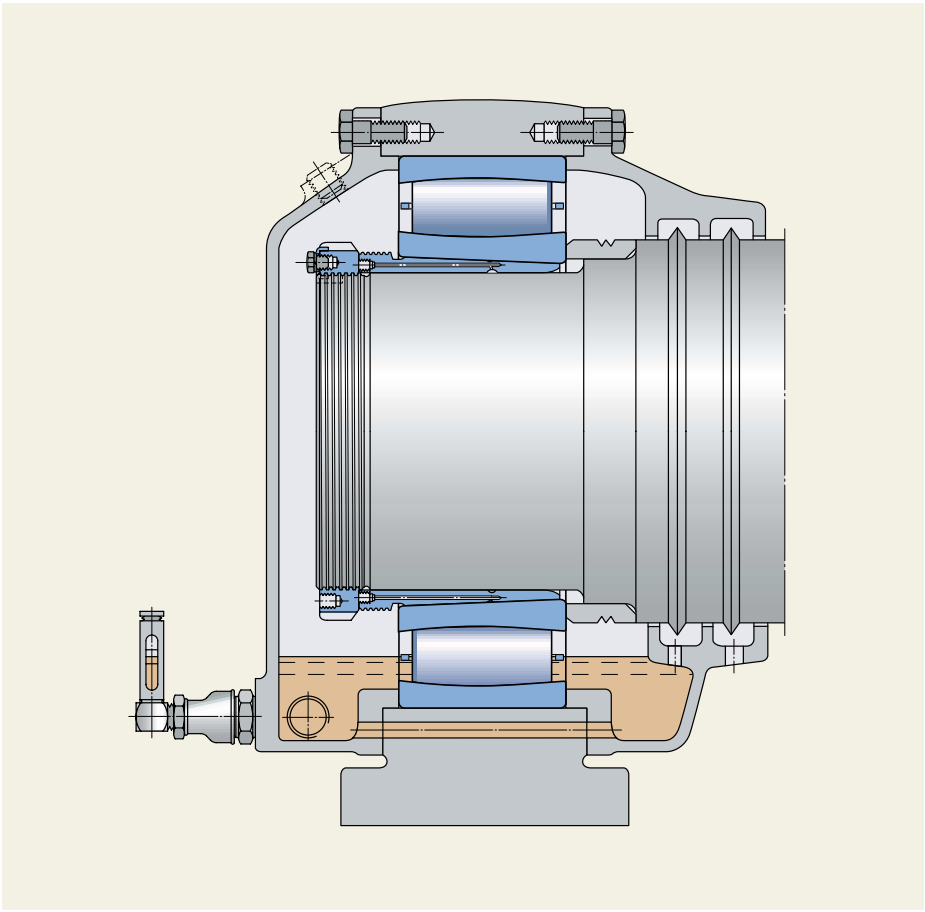

Bearing temperature/speed factor diagram

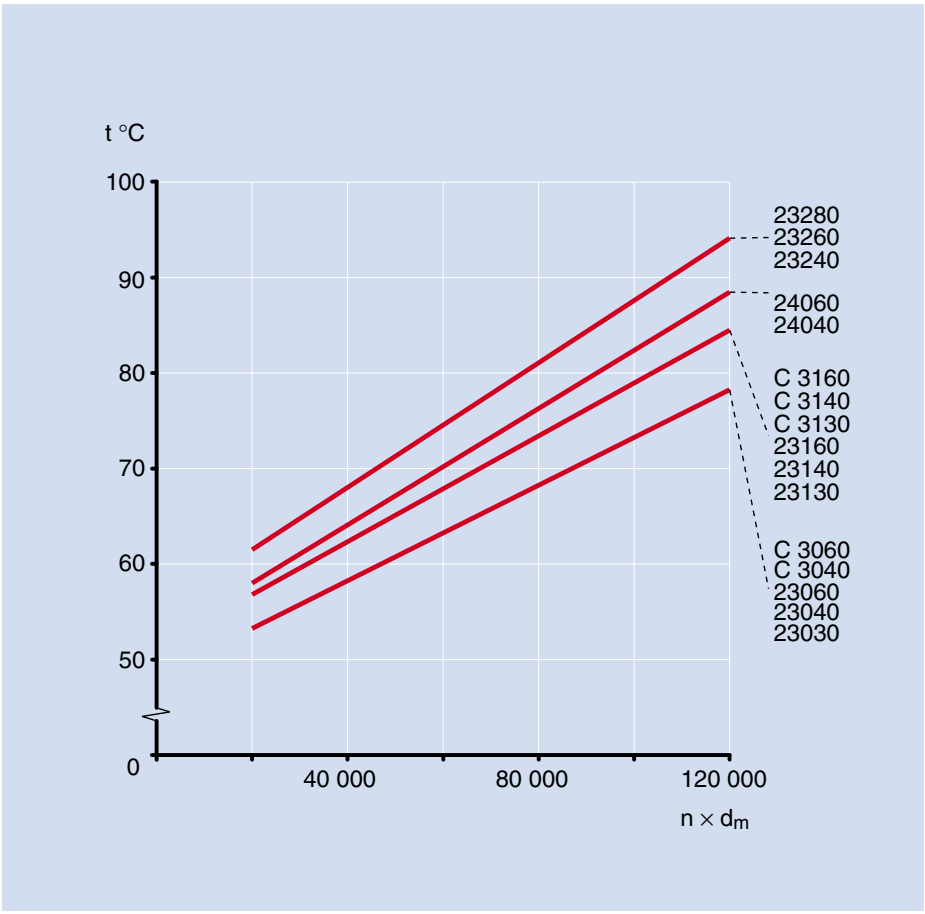

Example 32

Calender roll, plain, unheated (oil)

Machine data

Paper qualities	board, liner, fine, newsprint
Roll position	machine calender
Paper speed	400–2 000 m/min (1 310–6 550 fpm)

Operating conditions for the bearings

Rotational speed	20–130 % of the speed rating
Ambient temperature	45 °C (113 °F)
Lubrication	circulating oil
Oil viscosity	ISO VG 220
Oil inlet temperature	50 °C (122 °F)

Lubrication guidelines

The guidelines below are based on a large size bearing rotating at high speed, because these bearings have the most demanding operating conditions.

Large bearings rotating at high speed are subjected to a risk of smearing. To avoid smearing, the oil should have EP additives and the viscosity ratio κ should be according to the guidelines on **page 207**.

General guidelines, as outlined under “Oil lubrication” (➔ **pages 95–97**), should also be taken into account.

Comments on the diagram

Bearing temperature depends on the bearing speed, applied load and external cooling or heating of the bearing arrangement. Heat transfer from the housing, shaft and the foundation is largely dependent on the bearing application and operating conditions. Therefore, the oil flow in the diagram is valid only when the bearing application and operating conditions are similar to those indicated here.

The calculations for this diagram have been made using an SKF computer program to give the outer ring temperature. The load at each speed corresponds to the minimum recommended bearing life of 120 000 h.

The oil flow in the diagram is based on an ISO VG 220 oil and selected to fulfil two criteria: the κ guidelines and a bearing operating temperature of 75 °C.

If an oil with lower viscosity than ISO VG 220 is used for these bearings the oil flows must be increased. An oil with higher viscosity is to advantage and will improve the lubrication conditions, but the bearing temperature will increase a little.

Note that the diagram shows minimum oil flow. Slightly higher oil flow values are acceptable and beneficial in most cases.

Bearing application

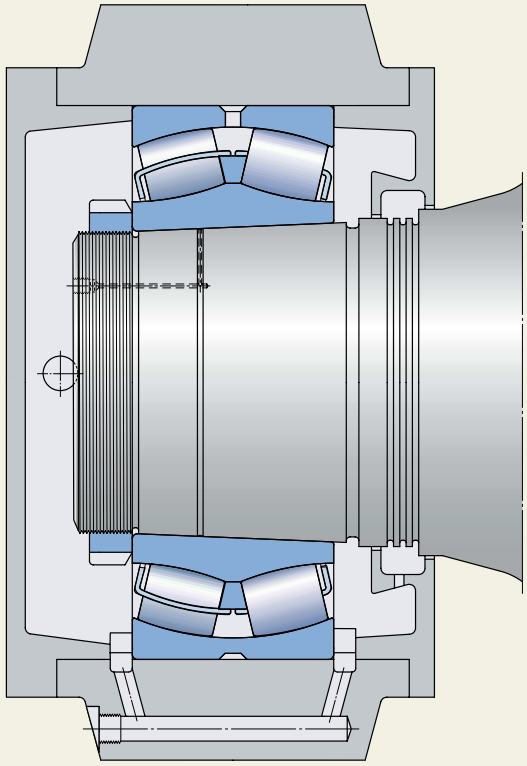

Oil flows for bearing temperature 75 °C (167 °F)

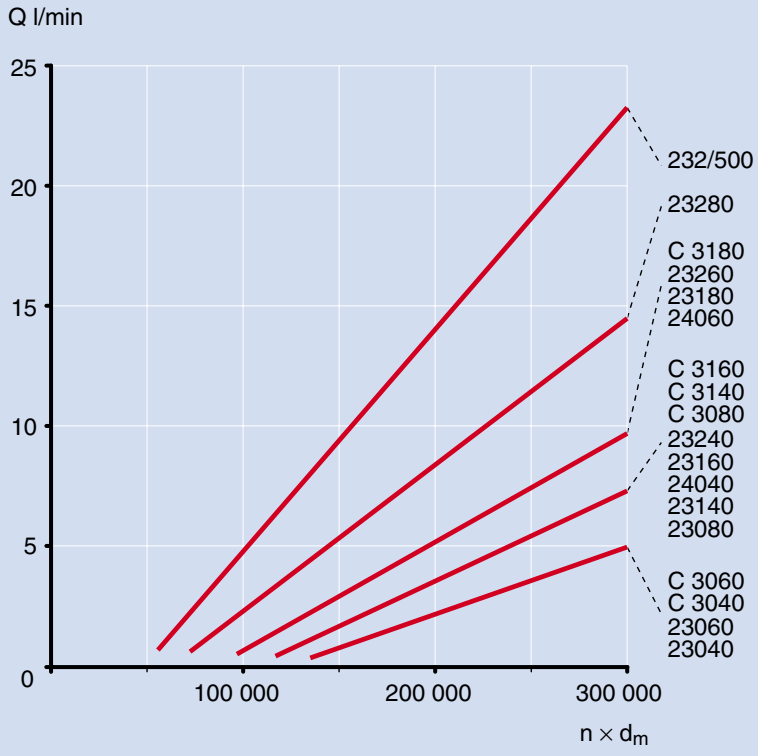

Example 33

Calender roll with steam temperature 140 °C (284 °F)

Machine data

Paper qualities	board, liner, fine, newsprint
Roll position	machine calender
Paper speed	400–2 000 m/min (1 310–6 550 fpm)

Operating conditions for the bearings

Rotational speed	20–110 % of the speed rating
Ambient temperature	45 °C (113 °F)
Lubrication	circulating oil
Oil viscosity	ISO VG 220
Oil inlet temperature	50 °C (122 °F)
Journal insulation	bore and end face

Lubrication guidelines

As large calender roll bearings sometimes rotate at high speeds there is a risk of smearing. To avoid smearing SKF usually recommends the use of an oil with efficient EP additives and oil flows giving a viscosity ratio κ according to the guidelines on **page 207**. However, with the above operating conditions the bearing temperature will be too high for EP additives and accordingly oils with efficient AW additives have to be used.

General guidelines, as outlined under “Oil lubrication” (→ **pages 95–97**), should also be taken into account.

Comments on the diagram

Bearing temperature depends on the bearing speed, applied load and external cooling or heating of the bearing arrangement. Therefore, the calculated bearing temperatures in this example are valid only when the bearing application and operating conditions are similar to those indicated here.

The calculations for this diagram have been made using an SKF computer program to give the inner ring temperature. The load at each speed corresponds to the minimum recommended bearing life of 120 000 h.

At high speeds it is not possible to fulfil the κ guidelines and accordingly the best possible lubrication conditions should be aimed for, especially since EP additives cannot be used.

At low speeds the diagram shows that the influence of the oil quantity on bearing temperature is considerable up to 2–4 l/min, but after that scarcely anything is gained by an increased oil flow. For large size bearings rotating at high speeds the diagram shows that the influence of the oil quantity is considerable up to about 8 l /min.

An oil with higher viscosity is beneficial and will improve the lubrication conditions, but the bearing temperature will increase a little.

Bearing application

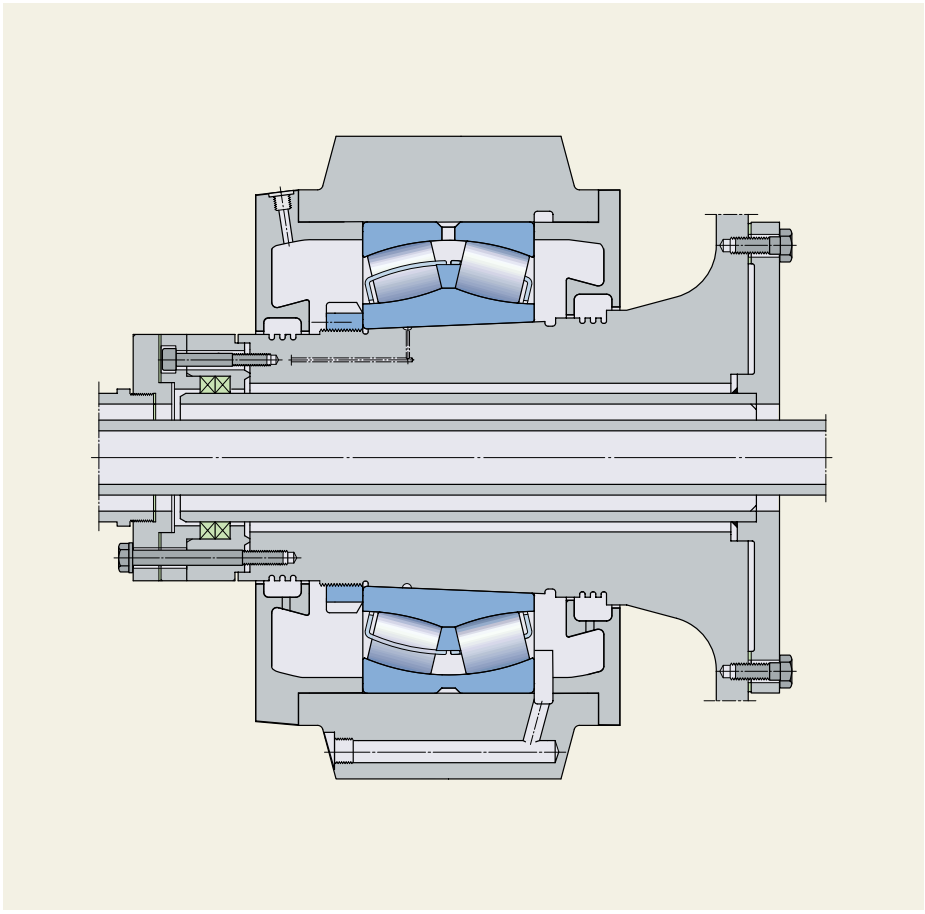

Bearing temperature/oil flow diagram

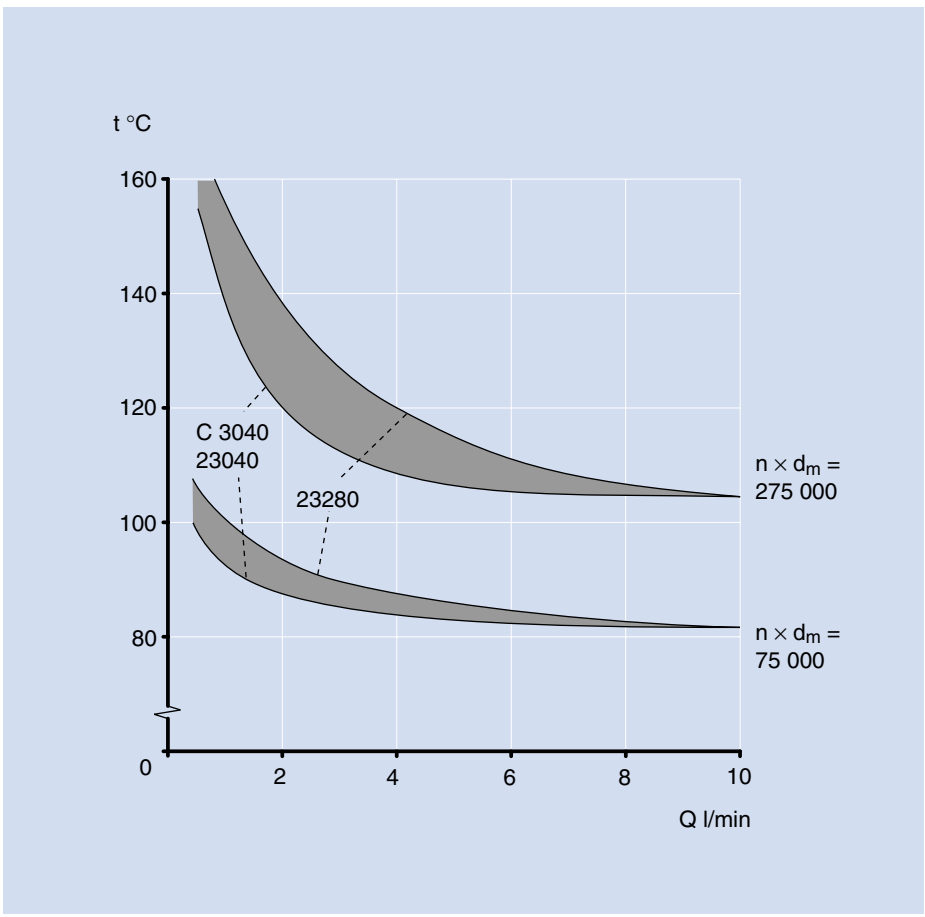

Example 34

Calender roll with steam/oil temperature 175 °C (347 °F)

Machine data

Paper qualities	board, liner, fine, newsprint
Roll position	machine/soft calender
Paper speed	400–2 000 m/min (1 310–6 550 fpm)

Operating conditions for the bearings

Rotational speed	25–150 % of the speed rating
Ambient temperature	50 °C (122 °F)
Lubrication	circulating oil
Oil viscosity	ISO VG 320
Oil inlet temperature	40 °C (104 °F)
Journal insulation	bore and end face

Lubrication guidelines

As large calender roll bearings sometimes rotate at high speeds there is a risk of smearing. To avoid smearing SKF usually recommends the use of an oil with efficient EP additives and oil flows giving a viscosity ratio κ according to the guidelines on **page 207**. However, with the above operating conditions the bearing temperature will be too high for EP additives and accordingly oils with efficient AW additives have to be used.

General guidelines, as outlined under “Oil lubrication” (→ **pages 95–97**), should also be taken into account.

Comments on the diagram

Bearing temperature depends on the bearing speed, applied load and external cooling or heating of the bearing arrangement. Therefore, the calculated bearing temperatures in this example are valid only when the bearing application and operating conditions are similar to those indicated here.

The calculations for this diagram have been made using an SKF computer program to give the inner ring temperature. The load at each speed corresponds to the minimum recommended bearing life of 120 000 h.

At high speeds it is not possible to fulfil the κ guidelines on **page 207**, and accordingly the best possible lubrication conditions should be aimed for, especially since EP additives cannot be used.

At low speeds the diagram shows that the influence of the oil quantity on bearing temperature is considerable up to 3–6 l/min, but after that scarcely anything is gained by an increased oil flow. For large size bearings rotating at high speeds the diagram shows that the influence of the oil quantity is considerable up to about 12 l /min.

An oil with higher viscosity is beneficial and will improve the lubrication conditions, but the bearing temperature will increase a little.

Bearing application

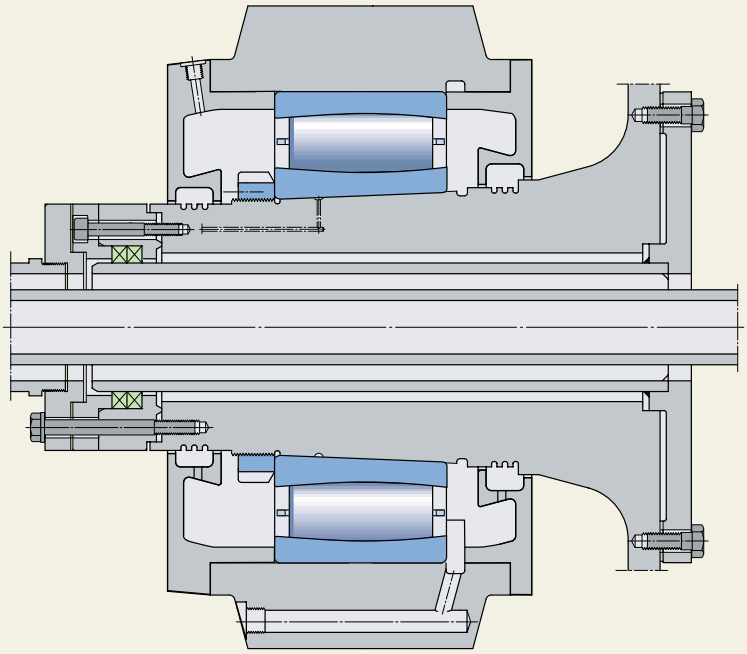

Bearing temperature/oil flow diagram

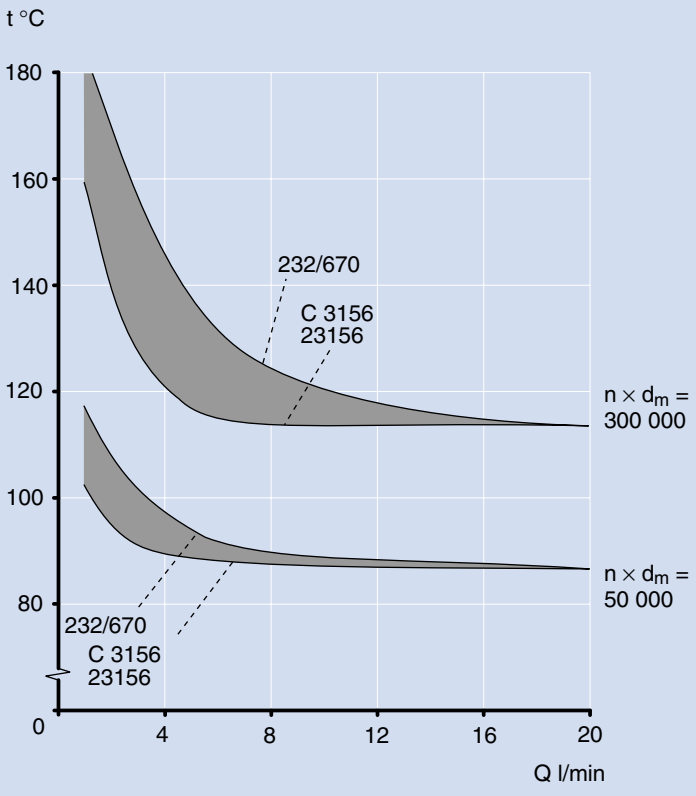

Example 35

Calender roll with oil temperature 250 °C (482 °F)

Machine data

Paper qualities	board, liner, fine, newsprint
Roll position	machine/soft calender
Paper speed	400–2 000 m/min (1 310–6 550 fpm)

Operating conditions for the bearings

Rotational speed	25–150 % of the speed rating
Ambient temperature	50 °C (122 °F)
Lubrication	circulating oil
Oil viscosity	ISO VG 320
Oil inlet temperature	40 °C (104 °F)
Journal insulation	bore and end face

Lubrication guidelines

As large calender roll bearings sometimes rotate at high speeds there is a risk of smearing. To avoid smearing SKF usually recommends the use of an oil with efficient EP additives and oil flows giving a viscosity ratio κ according to the guidelines on **page 207**. However, with the above operating conditions the bearing temperature will be too high for EP additives and accordingly oils with efficient AW additives have to be used.

General guidelines, as outlined under “Oil lubrication” (➔ **pages 95–97**), should also be taken into account.

Comments on the diagram

Bearing temperature depends on the bearing speed, applied load and external cooling or heating of the bearing arrangement. Therefore, the calculated bearing temperatures in this example are valid only when the bearing application and operating conditions are similar to those indicated here.

The calculations for this diagram have been made using an SKF computer program to give the inner ring temperature. The load at each speed corresponds to the minimum recommended bearing life of 120 000 h.

Except for small bearings rotating at low speeds it is not possible to fulfil the κ guidelines on **page 207**. Accordingly the best possible lubrication conditions should be aimed for.

At low speeds the diagram shows that the influence of the oil quantity on bearing temperature is considerable up to 4–6 l/min, but after that scarcely anything is gained by an increased oil flow. For large size bearings rotating at high speeds the diagram shows that the influence of the oil quantity is considerable up to about 16 l /min.

An oil with higher viscosity is beneficial and will improve the lubrication conditions, but the bearing temperature will increase a little.

Bearing application

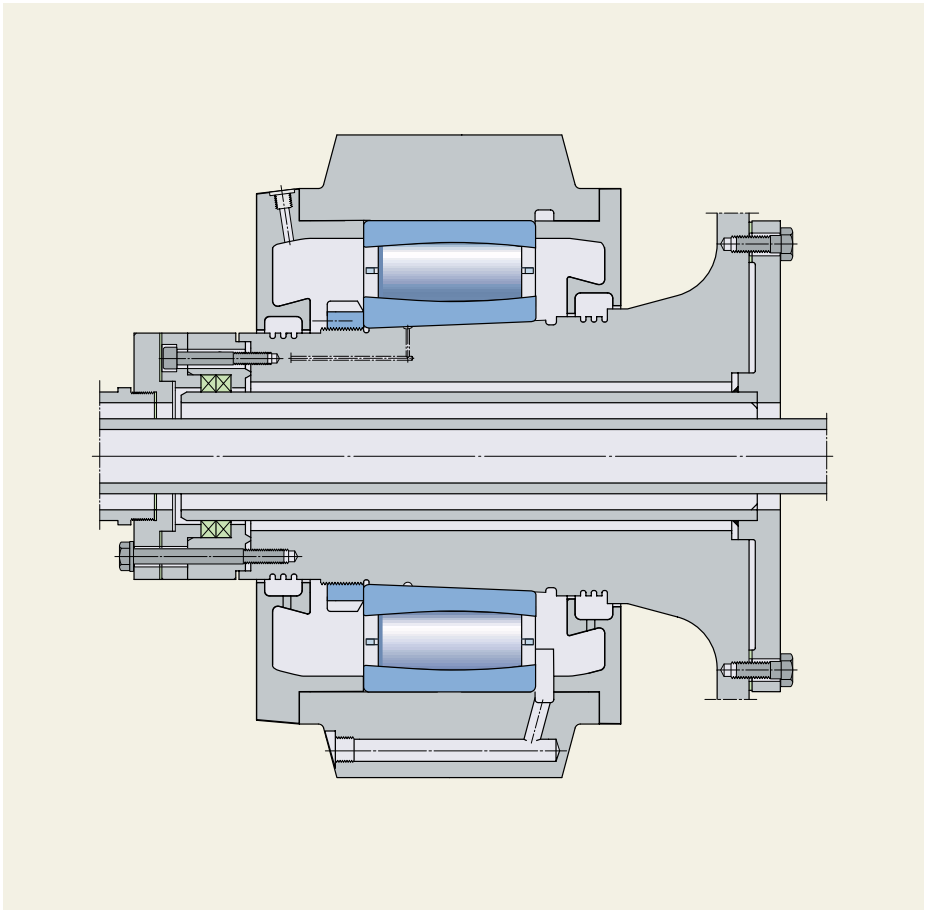

Bearing temperature/oil flow diagram

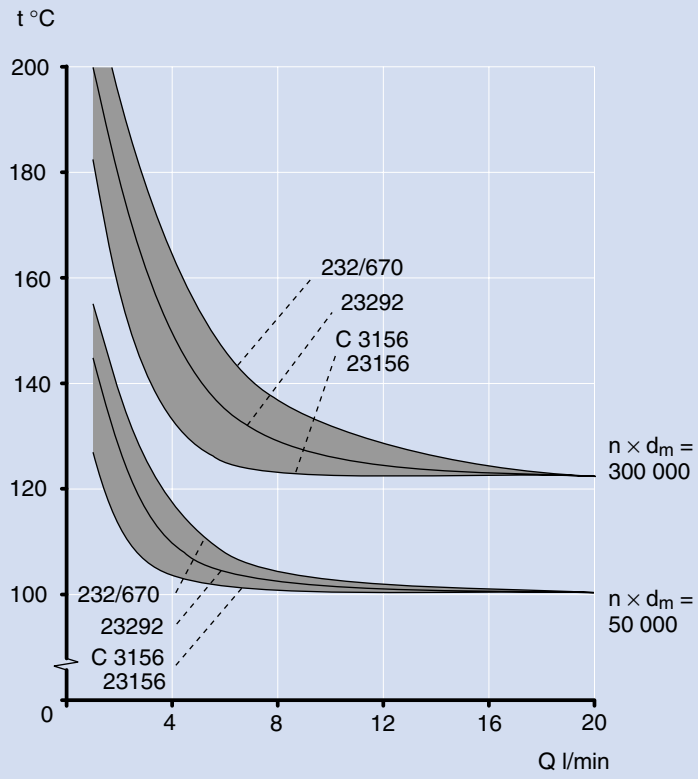

Example 36

Reel drum (grease)

Machine data

Paper qualities	all
Roll position	reeler
Paper speed	100–600 m/min (330–1 970 fpm)

Operating conditions for the bearings

Rotational speed	5–15 % of the speed rating
Ambient temperature	35 °C (95 °F)
Lubrication	grease
Base oil viscosity	175 mm^2/s at 40 °C

Lubrication guidelines

SKF experience is that a grease with a base oil viscosity of minimum 175 mm^2/s has good lubrication performance in this position.

The same grease as is used in the forming section can be used in this application, because the basic demands are the same and the special demands such as those for rust protection are higher in the forming section.

General guidelines, as outlined under “Grease lubrication” (→ **pages 91–94**), should also be taken into account.

Comments on the diagram

Bearing temperature depends on the bearing speed, applied load and external cooling or heating of the bearing arrangement. Heat transfer from the housing, shaft and the foundation is largely dependent on the bearing application and operating conditions. Therefore, the calculated bearing temperatures in the diagram are valid only when the bearing application and operating conditions are similar to those indicated here.

The calculations for this diagram have been made using an SKF computer program to give the outer ring temperature. The load at each speed corresponds to the minimum recommended bearing life of 120 000 h. The highest bearing temperature shown in the diagram is 75 °C as it is customary to use oil lubrication at higher temperatures.

Bearing application

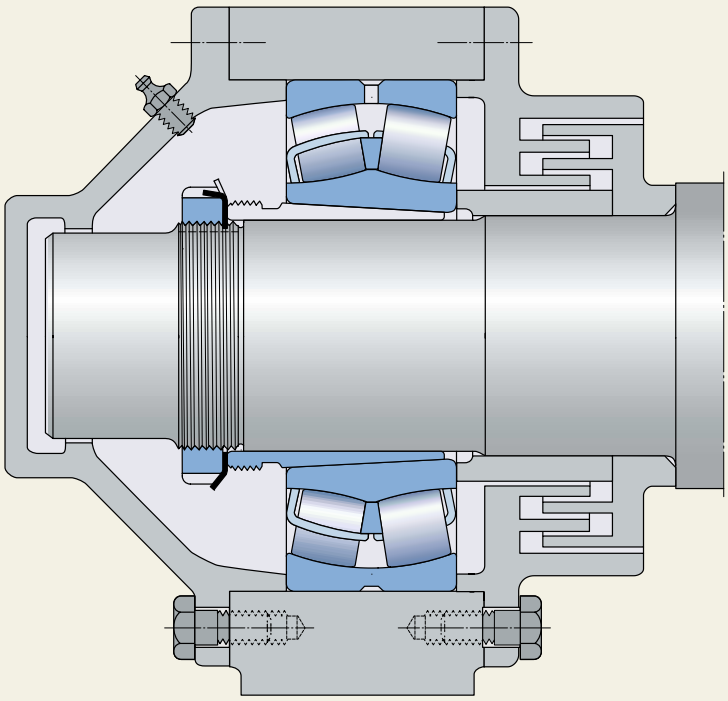

Bearing temperature/speed factor diagram

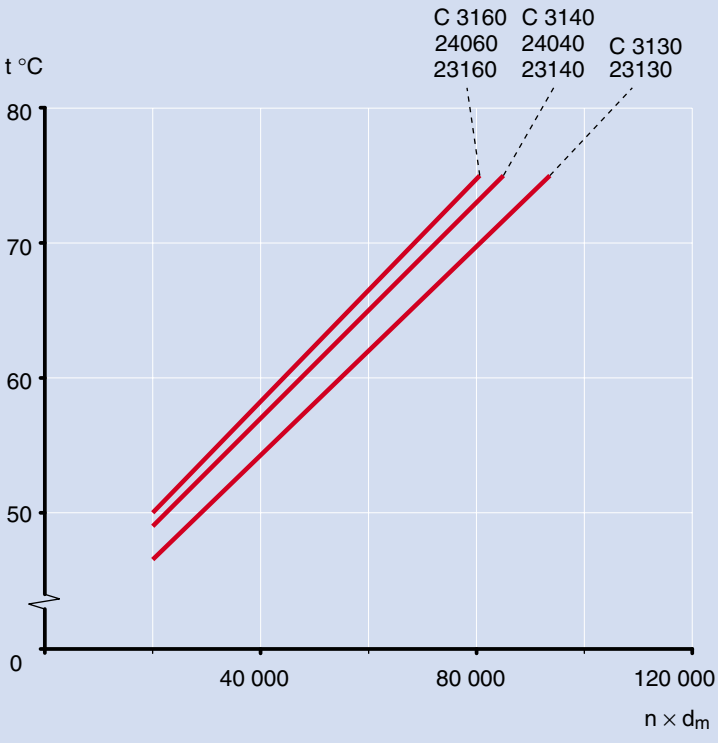

Example 37

Reel drum (oil)

Machine data

Paper qualities	all
Roll position	reeler
Paper speed	400–2 200 m/min (1 310–7 220 fpm)

Operating conditions for the bearings

Rotational speed	10–45 % of the speed rating
Ambient temperature	35 °C (95 °F)
Lubrication	circulating oil
Oil viscosity	ISO VG 220
Oil inlet temperature	45 °C (113 °F)

Lubrication guidelines

Reel drum bearings have better operating conditions than drying cylinder bearings which often are lubricated from the same circulating oil system. Therefore, the lubricant properties should be based on the operating conditions for drying cylinder bearings. However, the reel drum bearings should have an oil flow giving a viscosity ratio κ according to the guidelines on **page 207**.

General guidelines, as outlined under "Oil lubrication" (➔ **pages 95–97**), should also be taken into account.

Comments on the diagram

Bearing temperature depends on the bearing speed, applied load and external cooling or heating of the bearing arrangement. Heat transfer from the housing, shaft and the foundation is largely dependent on the bearing application and operating conditions. Therefore, the calculated bearing temperatures in the diagram are valid only when the bearing application and operating conditions are similar to those indicated here.

The calculations for this diagram have been made using an SKF computer program to give the outer ring temperature. The load at each speed corresponds to the minimum recommended bearing life of 120 000 h. The oil flow in the diagram is based on an ISO VG 220 oil and selected to fulfil two criteria: the κ guidelines on **page 207**, and a bearing operating temperature of 75 °C.

If an oil with lower viscosity than ISO VG 220 is used the flow must be increased in order to reach the same κ value.

An oil with higher viscosity is beneficial and will improve the lubrication conditions, but the bearing temperature will increase a little.

Note that the diagram shows minimum oil flow. Slightly higher oil flow values are acceptable and beneficial in most cases.

Bearing application

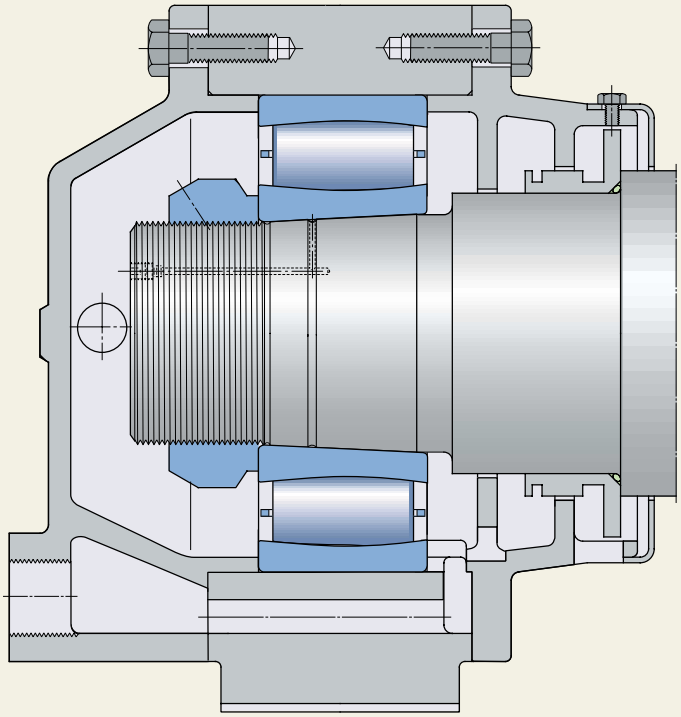

Oil flows for bearing temperature 75 °C (167 °F)

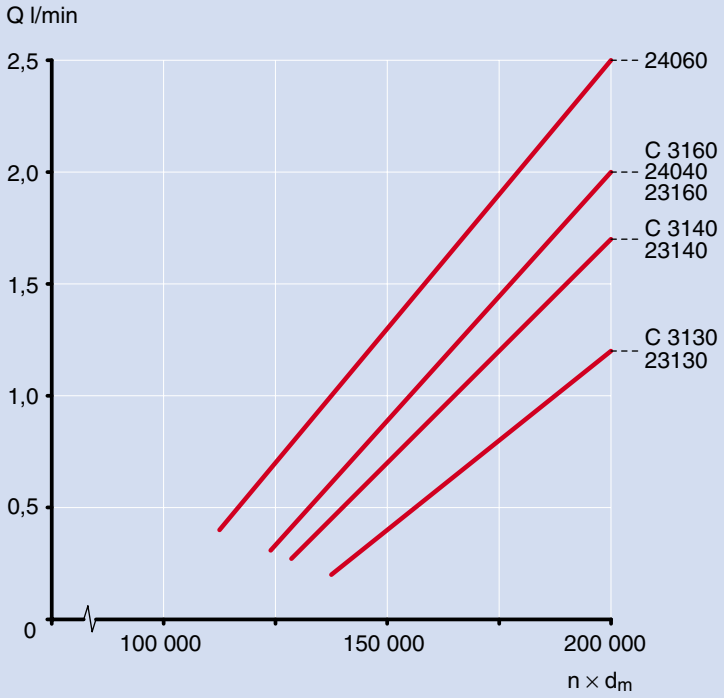



9 Maintenance

Maintenance philosophies 182

Services and products supplied by SKF 184

Rebuild front side of drying and Yankee cylinders to a CARB bearing arrangement 185

Mounting and dismounting 186

Condition monitoring 193

Standstill precautions 196

How to store spare bearings 197

How to avoid transport damage 199

Failure modes 200

How to avoid surface damage 207

Maintenance

Increasing competition in the paper industry has brought high pressure on the cost of producing paper. Many organizations were changed and measured against cost. This has caused a reduction of capacity in all departments but, because maintenance is often regarded as a cost centre, it has suffered the most.

Therefore, over the last few years, too little investment has been made in upgrades of maintenance technologies and competence. Maintenance has become more and more reactive and resulted in an increase in unplanned stops. To improve this situation, ways must be found to increase capacity by improving overall equipment efficiency, without large capital expenditures.

Machine efficiency

The most common way to express machine efficiency is the OME (Overall Machine Efficiency) percentage (**➔ fig 1**, **page 182**). OME is normally 65–95 %.

Paper mills and machine builders are paying a lot of attention to the OME percentage, but also to paper speed as total production is the result of OME, trim width and paper speed.

Aims of maintenance

Maintenance certainly has some influence on paper quality and web breaks, but the major aim of maintenance is to keep the machine running without disturbances. Every unplanned stop hour represents a production loss of at least 15 000 USD in a modern paper machine. The profit loss per hour can be as high as 4 000 USD.

An unplanned stop does not reduce the need for planned stops. During a planned stop, many other problems can be dealt with at the same time. Unplanned stops are just some extra hours taken off the production capacity.

Maintenance philosophies

Reactive maintenance
In the not so distant past the paper industry's approach to maintenance was "fix it when it breaks". Even today some mills still have this approach. With this type of maintenance, known as reactive or "Run to failure", action is not taken until a problem results in machine failure. The failure problems often cause costly secondary damage along with unplanned downtime and excessive maintenance cost.

Very often the failures are repeated, since often no real analysis about the reason for the failure is performed and therefore no corrective actions were performed.

Preventive maintenance
Preventive maintenance implies that a machine, or parts of a machine, is overhauled on a regular basis regardless of the condition of the parts. The schedule is based on experience, which means that some problem areas get more service than others. While preferable to reactive maintenance, preventive maintenance is costly because of excessive planned downtime from unnecessary overhauls and the cost of replacing parts on the machines operating efficiently together with worn parts. Preventive maintenance leads to fewer unplanned stops than with reactive maintenance but, some unplanned stops will always occur (➔ fig 2).

Fig 1

% OME = (Uptime) × (Saleable product) × 100 %

Where

$$\text{Uptime} = \frac{\text{Annual hours the machine produces paper}}{\text{Annual available hours*}}$$

$$\text{Saleable product} = \frac{\text{Saleable tonnage}}{\text{Produced tonnage}}$$

* Excludes scheduled stops over 24 hours as well as holidays.

Source: TAPPI 0404-47 (1997)

Measure of Overall Machine Efficiency (OME)

As with reactive maintenance, the failures very often are repeated, since often no real analysis about the reason for the failure and therefore no corrective actions were performed.

Predictive maintenance
Predictive maintenance is the process of determining the condition of machinery while in operation. This is possible by using vibration and lubrication analysis. This allows correction of problem components prior to failure. Predictive maintenance not only helps plant personnel reduce the risk of catastrophic failure, but also allows them to order parts in advance, schedule manpower and plan other repairs during the downtime.

Many paper mills, with efficient predictive maintenance, have no unplanned stops caused by bearing problems.

Root cause analysis is often not performed.

Fig 2

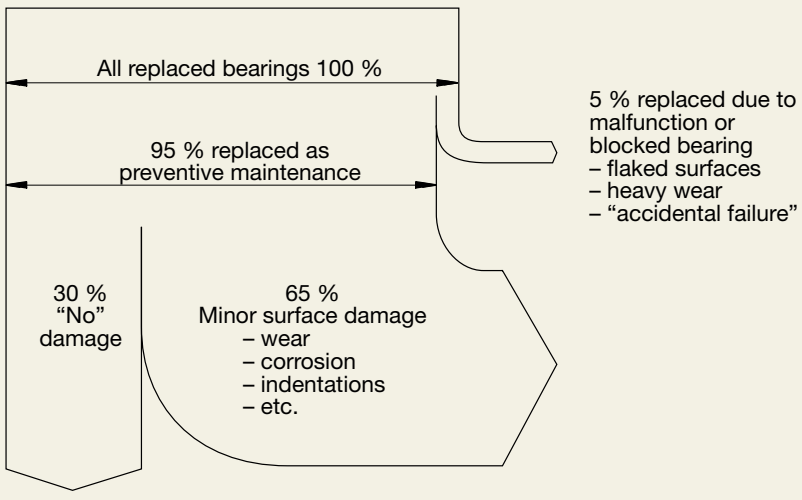

Failures in Swedish paper machines, estimated 1990

Diagram 1

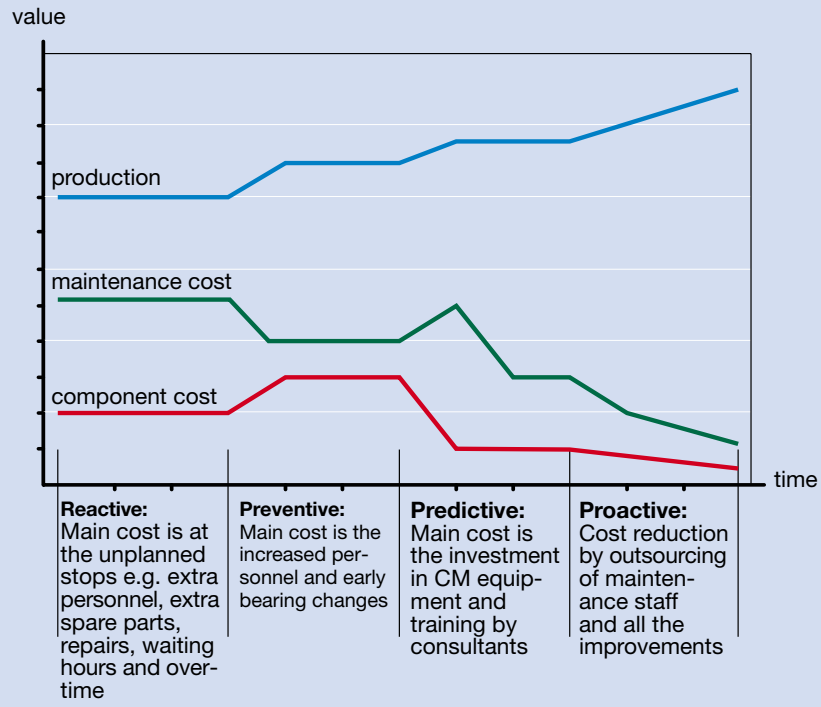

Development of production and cost relative to maintenance practices

Proactive maintenance
Proactive maintenance is a further development of the predictive method. When a failure is detected, the reason for the failure is always analysed and corrective actions are undertaken. This continuous improvement of the process, focussing on the weakest link in the chain, makes it possible to eliminate unplanned stops and to have longer time between the planned stops and shorter stops than before. The small improvements eventually make it possible to increase the production speed or load when needed.

The main difference between the maintenance philosophies can be seen in (→ **fig** 3 and **diagram** 1).

Fig 3

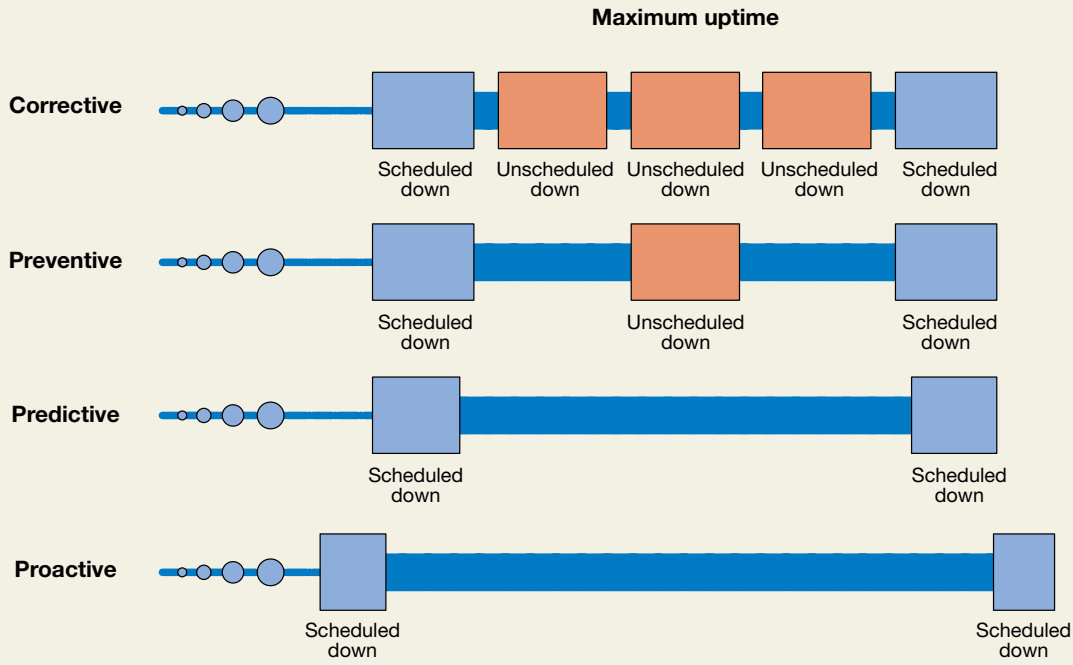

Maximum up time versus different maintenance philosophies

Services and products supplied by SKF

Over the years the SKF Trouble-Free Operation (TFO) program has extended bearing service life and increased productivity for bearing users by providing a full menu of bearing-related products and services. The original TFO program focused on education, with most of the work performed by the plant personnel. It also included services such as on-site trouble-shooting, application engineering support, bearing failure analysis and bearing rework services.

In recent years it has been a clear trend in many industries to outsource non-core maintenance to the component suppliers to reduce the total maintenance costs. This is also the case for paper mills. An increasing number of mills want the suppliers of machine elements like bearings, electrical motors, fans, pumps etc. to take over the responsibility of these products.

In response to this trend, SKF has combined its near-century of experience with bearings, industry and advanced capabilities in manufacturing and research to help customers increase productivity.

For example, SKF now offers performance-based contracts, with a guarantee of downtime reduction or uptime increase. The foundation for the contract is the SKF Proactive Reliability Maintenance (PRM) process, a systematic method to benchmark machine efficiency and implement corrective actions that decrease total life cycle cost. It involves predictive maintenance, root cause failure analysis, corrective actions and ongoing operational service measured according to Key Performance Indicators (KPI).

Furthermore SKF can offer services like shaft alignment, lubricant analysis, condition monitoring services, bearing refurbishment etc.

At SKF we also have put together the industry's most comprehensive program of products for minimising bearing failure. Among the products are mounting and dismounting tools (➔ **pages 186–192**), condition monitoring equipment (➔ **pages 193–195**) and grease (➔ **pages 92–93**).

Some of these products and services are shown in the chain (➔ **fig** 5). This chain illustrates the connection between machine reliability/availability and profitability. Remember that no chain is stronger than its weakest link!

Mounting of bearings

Fig 4



Increased profitability through products and services supplied by SKF

Fig 5

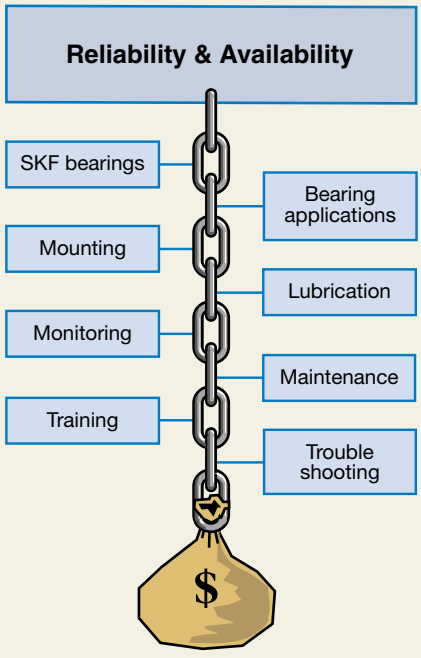

Rebuild front side of drying and Yankee cylinders to a CARB bearing arrangement

To obtain all the benefits a CARB bearing arrangement can give, SKF normally recommends the use of SKF CARB housings when rebuilding existing machines. Reworking existing housings can be as expensive as a new housing.

After many years in operation the bearing seatings of drying cylinder housings may have extensive fretting corrosion and be worn or oval. Therefore, in some cases the housing bore has to be reworked. When converting from a rocker housing, a reworked housing will not be as stable as a new one.

As CARB bearings follow the ISO standard for dimensions, bearing C 3152 has the same boundary dimensions as spherical roller bearing 23152 or cylindrical roller bearing N 3152. If the existing housings are inspected with good results they may in many cases, perhaps somewhat modified, be used for CARB bearings when converting from other bearing types. If too many modifications are required, the total cost for a rebuild can be as high as an investment in new housings.

When a rocker housing is modified to a fixed housing, it must be locked in all directions. This can be achieved by modifying the housing according to **fig** 6, depending on the design of the original housing.

When rebuilding from spherical roller bearings with an axially free outer ring, distance rings have to be used in order to axially locate the CARB outer ring (➔ **fig** 7).

When the existing bearing is lubricated from the side (➔ **fig** 8), it can be replaced by a CARB bearing without any changes related to the lubrication.

If the existing bearing is lubricated through the outer ring (➔ **figs** 13 and 14, **page 58**) the housing lubrication design must be changed when converting to a CARB bearing. One way is to displace the oil inlet to the outer side of the bearing as for the SKF standard CARB housings. However, this requires modifications in order to ensure that no oil drains out without passing through the bearing. In some existing housings the diameter of the oil channels con-

Fig 7

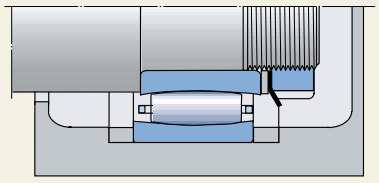

Axially located CARB outer ring

Modified rocker housing

Fig 6

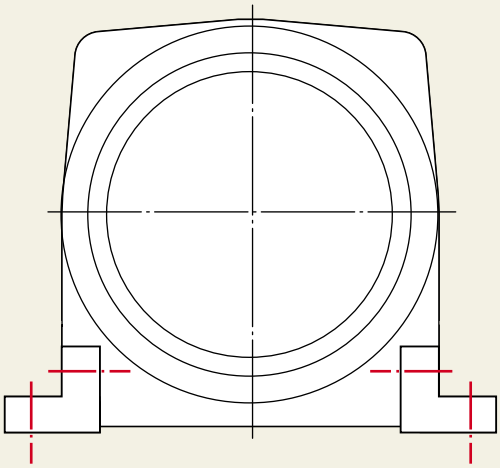

Fig 8

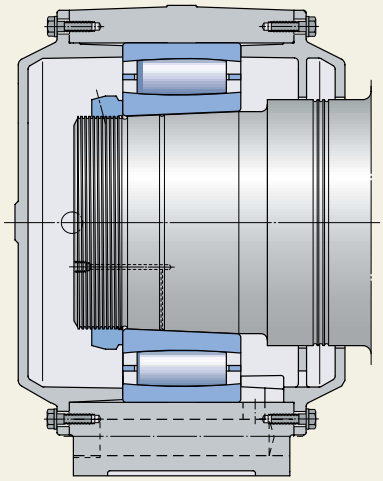

A CARB bearing lubricated from the side

necting the two sides of the bearing is small and should be enlarged to make a high oil flow possible. The other alternative is to displace the oil inlet to the inner side of the bearing and plug the oil channels connecting the two sides. Note that this modification may influence the drainage capacity of the housing.

When rebuilding to a CARB bearing arrangement, please contact SKF in order to optimise the bearing arrangement for bearing function and total cost.

SKF can offer a complete package for rebuilding existing housings to fixed CARB housings. This includes

- modification of existing housing
- CARB bearing
- mounting service

Mounting and dismounting

The paper industry has always led the way by adopting the innovative mounting and dismounting methods developed by SKF. For modern bearing arrangements, the SKF oil injection method has become industry standard.

SKF offers a complete range of tools for efficient bearing installation and removal including

- oil pumps and oil injectors
- hydraulic nuts HMV .. E
- pullers
- heaters

In order to facilitate mounting and dismounting most bearings in paper machines are fitted on tapered seatings. The use of adapter sleeves and withdrawal sleeves has predominated, but the practice of mounting bearings direct on tapered journal seatings is becoming more and more common. Running accuracy is improved and the cost of the sleeves is saved.

SKF Drive-up method

When mounting CARB and spherical roller bearings with tapered bore the SKF Drive-up method is a more precise and less subjective method than measuring the clearance reduction with feeler gauges. Furthermore this method saves time.

Therefore, SKF strongly recommends the use of this method for mounting

To the left:
SKF oil pumps and oil injectors

In the middle:
SKF pullers

To the right:
SKF heaters







larger bearings for example on drying cylinders, suction rolls and press rolls. This method is preferable for smaller bearings as well. Especially for CARB bearings, the feeler gauge method is difficult to apply.

SKF can supply suitable tools (➔ **fig 9**) and mounting instructions for general applications as well as specific applications like drying and Yankee cylinders. SKF can also supply the software program "SKF Drive-up" making it possible to make your own calculations. Note that the drive-up values obtained are only valid for SKF bearings. For more information please contact your local SKF sales unit.

A typical printout from the program is shown on **page 190**.

Sufficient clearance reduction

A radial clearance reduction – Δ_r – of around 0,0005 × d in paper machine applications is sufficient to prevent the inner ring from working loose. Considerable measuring uncertainty with feeler gauges is the reason for the wide tolerance range given in the General Catalogue. Note that a bearing mounted to the mean value according to the General Catalogue gets somewhat greater clearance reduction than 0,0005 × d.

Special situations

Sometimes the bearings are mounted with even greater clearance reduction than recommended in the General Catalogue. Common reasons are:

- Hollow shafts with very large bore, e.g. suction rolls
- Heavy loads (very few cases in paper machines)
- Experiences from equal or similar applications

One disadvantage with increased clearance reduction is an increased risk of a fractured inner ring. Therefore, the following guidelines should be applied for most unheated applications:

Fig 9

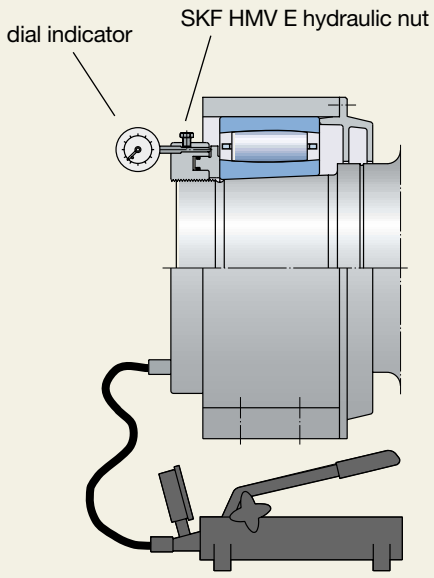

SKF hydraulic pump 729124 SRB (for nuts ≤ HMV 54 E)
SKF hydraulic pump TMJL 100 SRB (for nuts ≤ HMV 92 E)
SKF hydraulic pump TMJL 50 SRB (for nuts ≤ HMV 200 E)

The equipment for accurate drive-up

SKF oil pump and hydraulic nut (HMV .. E) with dial indicator



Dial indicators



- the clearance reduction Δ_r for SKF standard spherical roller bearings should not exceed 0,0007 × d
- the clearance reduction Δ_r for SKF spherical roller bearings with case hardened inner rings (suffix HA3) should not exceed 0,0009 × d

If a greater clearance reduction than normal is chosen, do not forget to check if a bearing with greater clearance than Normal (C3, C4 ...) is needed in order to avoid preload during operation. For heated shafts – like drying cylinders – greater clearance than normal is always needed.

Starting position

In order to obtain reliable drive-up measurements, the influence of form errors must be reduced to negligible proportions. This can be done by driving the bearing up, passing the indeterminate zero position, to a starting position that corresponds to a certain small initial interference (➔ **fig** 10). Above this initial interference, reduction in the radial internal clearance may be regarded as being directly proportional to the axial drive-up.

Note that pressurised oil must not be injected to the mating surfaces before the starting position is reached!

Axial drive-up from the starting position

The axial drive-up is best monitored by a dial indicator connected to an HMV .. E nut.

If pressurised oil has been injected to the mating surfaces during the drive-up, wait a few minutes before releasing the hydraulic nut pressure so that the oil can drain from the surfaces.

Interference reduction due to smoothing

Smoothing is a particularly important consideration for smaller bearings.

The drive-up values s_s given in tables supplied by SKF include an interference compensation for smoothing valid for one sliding surface, new SKF components and shaft surface roughness R_a = 1,6 µm.

If the mating surfaces are worn, e.g. the bearing has been mounted several times before and/or two sliding surfaces, the interference reduction due to smoothing is different. A calculation is then recommended.

For large size bearings the influence of smoothing is negligible in most cases. Only if the shaft surface is very rough compensation has to be considered.

Fig 10

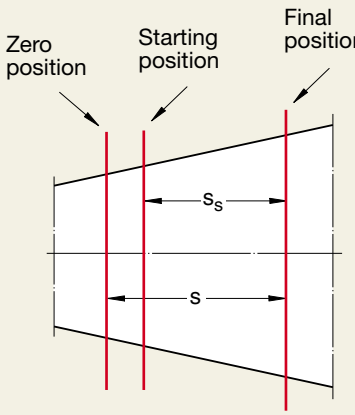

SKF drive-up method: Zero/starting/final position

Mounting on solid shafts

1. Ensure that the bearing size is equal to the HMV .. E nut size. Otherwise the pressure listed in the tables supplied by SKF must be adjusted.

2. Determine whether one or two surfaces slide during drive-up (➔ **figs** 11, 12, 13 and 14) (➔ **fig** 11), one sliding surface (➔ **fig** 12), one sliding surface (➔ **fig** 13), two sliding surfaces (➔ **fig** 14), two sliding surfaces

3. Lightly oil all mating surfaces with thin oil, e.g. SKF LHMF 300, and carefully put the bearing on the shaft.

4. Drive the bearing up to the starting position (➔ **fig** 10) by applying the HMV .. E nut pressure listed in the tables. Monitor the pressure by the gauge on the selected pump.
   SKF hydraulic pump 729124 SRB is suitable for hydraulic nuts ≤ HMV 54 E.
   SKF TMJL 100 SRB is suitable for hydraulic nuts ≤ HMV 92 E, while TMJL 50 SRB is suitable for nuts ≤ HMV 200 E.

Bearing mounted directly on a tapered shaft: One sliding surface

Fig 11

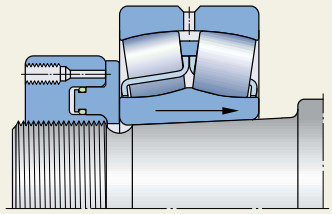

Bearing mounted on an adapter sleeve on a smooth shaft: One sliding surface

Fig 12

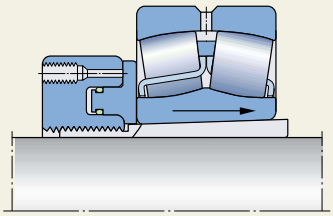

Bearing mounted on an adapter sleeve on a stepped shaft: Two sliding surfaces

Fig 13

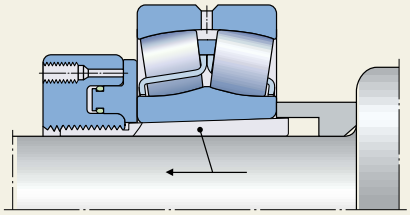

Bearing mounted on a withdrawal sleeve on a stepped shaft: Two sliding surfaces

Fig 14

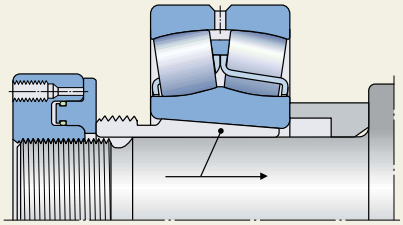

As an alternative the SKF pressure gauge TMJG 100 D can be screwed directly into the hydraulic nut.

5. Drive the bearing up the taper the required distance s_s (➔ **fig** 10). The axial drive-up is best monitored by a dial indicator. The SKF hydraulic nut HMV .. E is prepared for dial indicators.

Mounting on drying cylinders

When mounting spherical roller bearings and CARB on drying cylinder journals the use of the new SKF drive-up method is strongly recommended. This is a more precise and less subjective method than measuring clearance reduction with feeler gauges. Suitable tools are shown in **fig** 9, **page 187**.

SKF spherical roller bearings

1 Lightly oil the mating surfaces with a thin oil (for example SKF LHMF 300).
2 Carefully position the bearing in the housing and on the shaft.
3a For housings bolted to the frame (or frame housings): Check that all rollers are unloaded, i.e. the shaft must be centred in the housing during the drive-up.
3b For housings disconnected from the frame: Lift the shaft with bearing and housing about 5 mm and check that the housing is free to move axially.
4 Drive the inner ring up to the starting position (➔ **fig** 10). Do not use the oil injection method in this case.
5 Drive the inner ring up the taper the required distance s_s (➔ **fig** 10) ± 5 % (wait a few minutes before releasing the hydraulic nut).
6 If the housing has been disconnected, bolt it to the frame again.
7 Check the housing alignment, e.g. shaft centred relative to the inner cover.
8a For front side housings bolted to frame: Check the axial position of the housing.
8b For front side housings on rockers: Check the position of rockers and base plate.
9 If necessary, adjust the position of the housing/rockers/base plate.

Example of SKF drive-up calculation: Bearing 23152 CCK/W33 mounted directly on a tapered shaft

SKF Drive-up

Date: 2002-05-09

Every care has been taken to ensure the accuracy of the information in this system but no liability can be accepted by SKF for any errors or omissions. **NB!** This method applies only for current generation SKF bearings.

Input

Mounting	Bearing directly on shaft, one sliding surface	
Number of previous mountings	3	(of same bearing on the same shaft and sleeve)
Required clearence reduction, mm	0.130	
Shaft material	Steel	E = 210000 N/mm^2 υ = 0.3

Results

Force to starting position		54051 12152	N lbf
Pump pressure to starting position using	**HMV 52 E** **HMVC 52 E**	2.88 417	MPa psi
Drive-up distance from starting position		1.618 0.064	mm inch

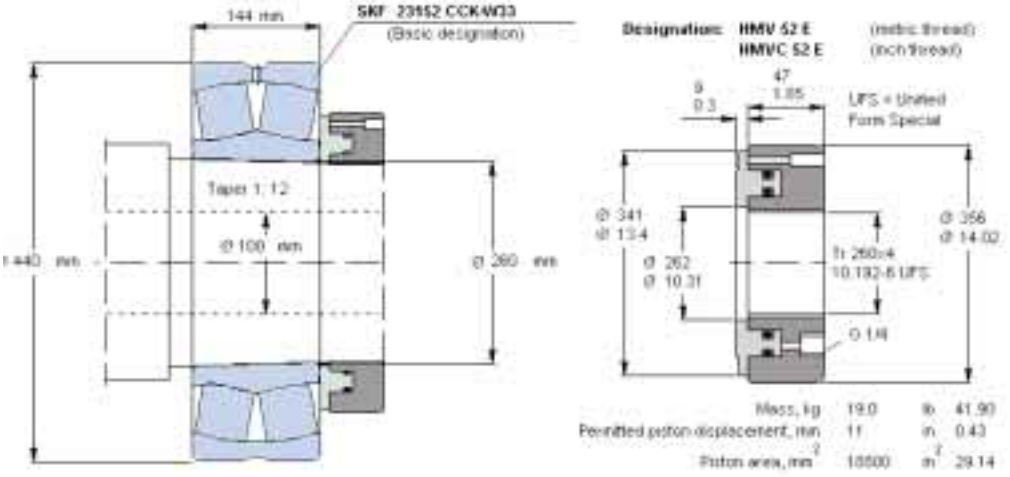

Suitable tools

Hydraulic nut	SKF HMV .. E	
Hydraulic pump with special pressure gauge	SKF 729124 SRB	for nuts ≤ HMV 54 E
	SKF TMJL 100 SRB	for nuts ≤ HMV 92 E
	SKF TMJL 50 SRB	for nuts ≤ HMV 200 E
Dial indicator	SKF TMCD 5 P or SKF TMCD 10 R	

Mounting procedure

1. Lightly oil all mating surfaces with a thin oil, e.g. SKF LHMF 300.
2. Drive the bearing up to the starting position by applying correct pump pressure or force.
3. Drive the bearing up on the taper the required distance while measuring the axial movement of the HMV .. E piston.

Complete bearing designation .....
Machine no.: .....
Position: .....
Mounted by: .....
Date: .....

SKF Drive-up Method Version 3.0 © Copyright SKF, 2001

Fig 15

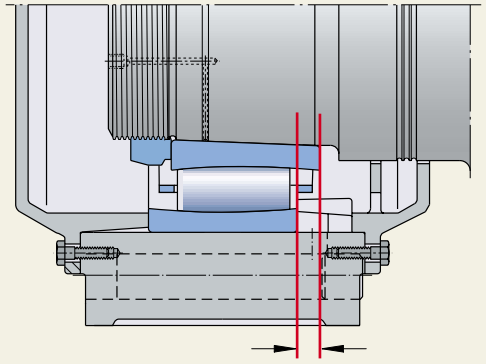

Table 1

Cylinder length over	incl.	Steam temperature	Initial axial displacement
m		°C	mm
0	4	<160	0–1
0	4	160–200	2–4
4	7	<160	2–4
4	7	160–200	4–6
7	11	<160	4–6
7	11	160–200	6–8

Initial displacement can be used to increase the available axial clearance for cylinder expansion

SKF CARB bearings

1 Lightly oil the mating surfaces with a thin oil (for example SKF LHMF 300).
2 Carefully position the bearing in the housing and on the shaft.
3a For housings bolted to a frame: check that all rollers are unloaded, i.e. the shaft must be centred in the housing during the drive-up.
3b For housings disconnected from the frame: Lift the shaft with bearing and housing about 5 mm and check that the housing is free to move axially.
4 Drive the inner ring up to the starting position (➔ **fig** 10, **page 188**). Do not use the oil injection method in this case.
5 Drive the inner ring up the taper the required distance s_s (➔ **fig** 10, **page 188**) ± 5 % (wait a few minutes before releasing the hydraulic nut).
6 If the housing has been disconnected, bolt it to the frame again.
7 Check the housing alignment, e.g. shaft centred relative to the inner cover.
8 Check that the axial displacement of the inner ring (relative to outer ring) is within specified values.
9 If necessary, adjust the position of the housing.

Initial axial displacement of CARB housings for heated cylinders

Housing displacement for heated cylinders

SKF experience shows that the thermal elongation of drying cylinders is about one millimetre per metre cylinder length at a steam temperature of 150 °C. To compensate for this elongation it is possible to displace the housing outwards from the cylinder (➔ **fig** 15).

To achieve an equal or higher safety margin against preload as for spherical roller bearings with C4 clearance, the axial mounting positions shown in **table** 1 are recommended (valid for cold machine).

Dismounting

In most cases drying cylinder bearings are mounted in non-split housings and dismounted without disconnection of the housing from the frame. The shaft is then to be centred in the housing (i.e. all rollers in the bearing are to be unloaded) during dismounting.

First the bearing inner ring is released from the tapered shaft by the use of the SKF oil injection method. The distance between the inner ring side-face and nut must be about twice the drive-up distance. If the distance is longer there is a risk of raceway damage.

When the inner ring is released the bearing is to be dismounted from the housing.

It is often difficult to dismount a bearing from a non-split housing. The reasons are that it is difficult to apply an axial dismounting force by hand and that sometimes the outer ring tends to stick in the housing, especially if fretting corrosion has occurred.

For spherical roller bearings the easiest way is to lift the shaft slightly, pull out the bearing and housing and, when they are outside the machine, press out the bearing.

For spherical roller bearings mounted in the machine frame special tools or methods may be needed.

As the dismounting force on a CARB bearing must be applied on the outer ring, the use of the SKF puller shown in **fig** 16 is strongly recommended. The use of a puller is possible due to the design of the CARB bearing having more space between rollers, cage and outer ring compared with a spherical roller bearing.

For more information about dismounting tools, please contact SKF. Please also contact SKF if you want mounting and dismounting services to be provided. Your local SKF Service company can offer the resources as well as the equipment in order to guarantee proper installation and cost saving by reducing secondary damages caused by improper handling of the bearings to a minimum.

The SKF puller for easy dismounting of CARB bearings

Fig 16

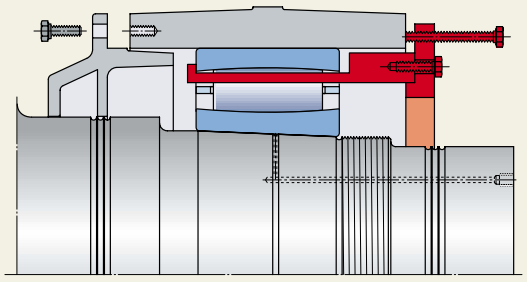

Condition monitoring

The aim of the condition monitoring system is to measure the condition of "wear" components and other functions that influence machine reliability. The advantage of condition monitoring using vibration analysis is that it acts as an early warning system. This means that there is time for corrective actions and bearing replacement can be well planned (➔ **diagram** 2).

Here are examples of components and systems that are measured:

- bearings
- felts
- gearboxes
- electrical motors

Here are examples of "wear" components that are manually inspected instead of monitored:

- seals
- doctor blades
- roll covers

Multi-parameter monitoring

Developed jointly by SKF Condition Monitoring and the SKF Engineering and Research Centre in the Netherlands, Multi-Parameter Monitoring is the most comprehensive, reliable and accurate approach to machinery monitoring and analysis. Collecting and analysing multiple measurement parameters greatly increases the capability to accurately and readily identify bearing faults and other machinery problems.

By measuring a number of machinery parameters – from acceleration, velocity and displacement to process parameters like speed, temperature, current, pressure and flow – users gain essential insights into a machine's condition. Advanced analysis techniques like Acceleration Enveloping enable analysts to take the guesswork out of maintenance by supplying the information needed to take action toward preventing unscheduled downtime



Vibration Pen^{plus}

Diagram 2

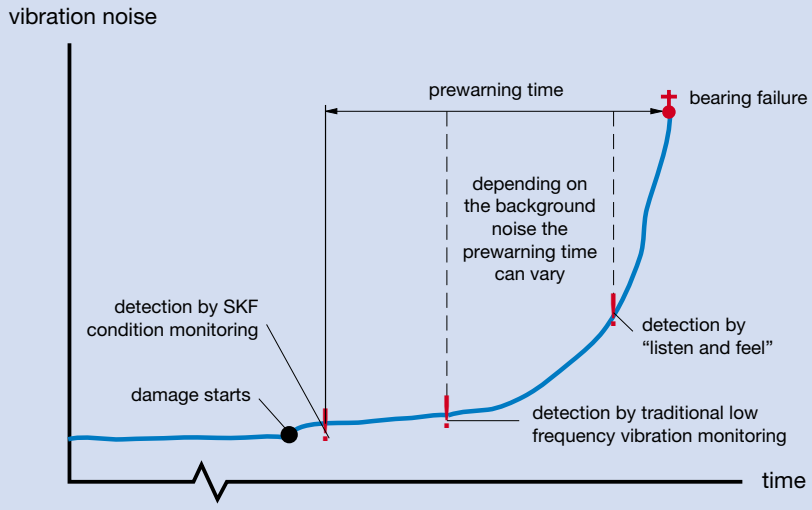

The advantage of condition monitoring

Vibration

Traditional low frequency vibration monitoring continues to be an essential in identifying problematic machinery conditions. Generally, malfunctions that cause vibration and loss of machine efficiency ultimately result in damage to the machine or its components. While low frequency vibration analysis can be an effective indicator of bearing damage, it may not be the most timely.

Acceleration enveloping

For earlier detection of machine faults, enveloping techniques are very effective. Enveloping enhances repetitive signals caused by the pulses emanating from a damaged bearing, for example. In the early stages, these types of bearing flaws generate signals that may go undetected amid general machine vibration “noise”. The use of envelope detection makes it possible to pinpoint not only the nature, but the location of bearing or gear damage. This is the same technique which SKF has used in its own factories since the 1970s to check bearing quality.

Operator tools

Economical, easy-to-use, handheld instruments provide a quick and basic indication of problem areas.

The Vibration Pen^{plus} (➔ **page 193**) is a pocket-sized, go anywhere measurement device which measures overall vibration levels according to ISO standards and acceleration enveloping peak values according to SKF standards.

The hand-held product range also features the Marlin™ condition detector, which is a hand-held probe that collects and compares operating data to provide advance warning of costly machine problems. Red, yellow or green lights indicate machine status instantly for assessment of bearing and lubrication problems.

The handheld instrument range provides operators with the means to become key participants in ensuring greater machine reliability. With the press of a button, operators detect significant changes in machine operation which could require further investigation.

Portable data collection

Portable data collectors like the Microlog allow efficient data collection and on-site analysis. The models CMVA60 and CMXA50 are unique with their embedded expert guidance to assist analysts in diagnosing machinery problems on the spot. Data collected by the Microlog may be up-loaded to Machine Analyst™, Windows Data Management and Analysis Software, for further analysis and trending (➔ **page 193**).



Marlin™



Microlog CMXA50



Microlog CMVA 60

Continuous monitoring

On-line monitoring for round-the-clock bearing and machinery analysis offers significant advantages in a harsh paper-making environment. With the Multilog Local Monitoring Unit, permanently installed sensors collect data from hard-to-reach or problem machine sections, eliminating the need for manual or walk-around data collection, while Machine Analyst™ On-Line displays current information on machine operation for powerful “real-time” analysis. Such systems offer the greatest degree of worker safety and data consistency.

SKF Machine Analyst™

SKF Machine Analyst™ is a software platform, using an Oracle relational database, which provides a comprehensive reliability solution for manufacturing plants. It gives the user complete control over condition monitoring data, as well as analysis and reporting, with extensive customization features. Toolbars, data plots, security levels, screen layout and more can all be changed to suit individual users.

Written from the ground up using Component Object Model (COM) architecture, SKF Machine Analyst™ can be easily and effectively integrated with third party plug-ins, as well as systems such as Computerized Maintenance Management Systems, Enterprise Resource Planning and others.

The software also offers a number of time saving features. It allows a user to automatically schedule key operations like reporting or archiving at specific times or after an action occurs, such as uploading data. An Alarm Wizard automatically calculates a reliable set of alarm criteria, setting appropriate parameters for vibration levels tailored to the specific plant.



Standstill precautions

Despite the use of water extractors, many oil lubrication systems have small quantities of free water, especially in the forming and press section. Grease lubricated bearings also may have free water in the lubricant.

The highest risk of water ingress probably occurs during high-pressure cleaning of machine frames, wires and felts. Free water in the lubricant, especially water mixed with cleaning chemicals, will rapidly start a corrosion process on bearing surfaces when the machine is at a standstill. There are some different ways of avoiding such corrosion:

- never direct the high pressure spray nozzle towards the sealing gap
- keep the water outside the bearing by more efficient seals
- with oil lubrication, remove the free water by using more efficient water extractors
- replace the contaminated lubricant (grease or oil in a bath) by fresh and clean lubricant

The last alternative is the one most commonly used method for grease lubricated bearings. Fresh grease is injected just before closing down.

The most common method with oil lubrication is to remove the water by increasing extractor capacity before closing down, e.g. using a portable vacuum extractor. In some circulating oil systems it is even possible to let the oil continue to circulate during standstill, which is of course an advantage.

SKF LHVI 1 is a rust inhibiting agent which creates a vapour that coats and protects surfaces from corrosion. It can be added to the oil to improve corrosion protection in machines that are stored for some time. Before the machine restarts, the oil should be drained. It is also suitable for use on external components where a tacky film is acceptable e.g. castings, pumps, valves and compressors. The agent should not be used in the oil for machines that are in operation, since it then can clog the filters

SKF LHVI 1



How to store spare bearings

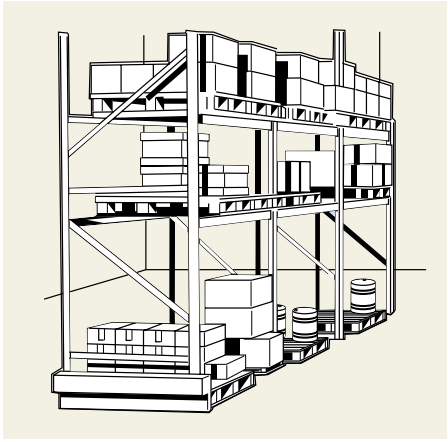

Bearing store

Unused bearings

When it comes to unused bearings these should be stored in the original SKF packaging in an indoor low-humidity store.

The store should:
- be clean
- be dry
- be free from air flow
- have air conditioning if the relative humidity in the store is >75 %
- be free from vibrations
- have a constant temperature. Max temperature fluctuation: 3 °C/48 hours.

Table 2 gives recommemded max storage time.

Used bearings

Papermills have a number of spare rolls in their roll store. Some of these rolls like suction, press and calender rolls are regularly reground and replaced in the machine, while others are only stored for security reasons. The latter type of rolls can be stored for a long time.

Before taking out a roll from the machine it is normally high pressure cleaned. The roll is then stored, often for several weeks, before regrinding. During this period there is a great risk of corrosion if water is present in the housing.

When the roll has been taken out from the machine our recommendations on actions (➔ **page 198**) should be followed. However, by experience we know that this is often not done before the regrinding resulting in bearing corrosion. Therefore, to be on the safe side, grease lubricated bearings should be regreased during rotation, after the cleaning procedure, just before the machine is stopped. Note that the grease quantity must be large enough to press out all contaminated grease. If the cleaning of the rolls happens outside the machine, it is important to cover the seals so no water can enter through the seals. For oil lubricated bearings the housing should be flushed with oil to which rust inhibitor SKF LHVI 1 has been added as soon as the roll is dismounted from the machine.

Table 2

Recommended maximum storage time (from the packing date)[1)]

Relative air humidity	Temperature	Storage time
%	°C	years
60	20–25	10
75	20–25	5
75	35–40	3
Uncontrolled tropical conditions		1

[1)] Recommendation is valid for open bearings only. For lubricated (sealed) bearings recommended time is 3 years maximum

How to store spare bearings

For bearings that are going to be stored for a lengthy period we recommend the following actions:

- in the case of grease lubricated bearings, dismount the bearing housings and remove all old grease from the bearings and the housings
- if possible, dismount the bearings from the journals
- wash the bearings with a very thin clean oil
- inspect the bearings to ascertain whether or not they can be used for further service in the machine
- remount the bearings and the housings
- lubricate and protect the bearings against corrosion. This can be done with the same lubricant that is used in the machine.
- if possible, place the roll in a store where it is supported by the bearings and subjected to perpetual rotation.
- bearings that are to be stored under static conditions, either dismounted or on the journals, must be protected against corrosion. Grease lubricated bearings can be packed with fresh grease. Oil lubricated bearings can be protected with a rust inhibitor e.g. SKF LHVI 1 or rust-inhibiting oil, e.g. SKF LHRP 1. Up to one year's protection can be obtained. Thereafter, preservation needs to be repeated.

How to avoid transport damage

The best and only fully safe way to avoid bearing damage is to transport the bearing in its original packaging and only unpack the bearing at the final destination.

When installed bearings are transported, the rollers should either be preloaded or completely free to move. When the rollers are preloaded there is usually no risk of sliding and smearing. However, during transportation under bad conditions small movements sometimes occur causing false brinelling.

Since the rolling element weight is relatively small, the contact load in a bearing with free rollers is usually not large enough to cause smearing even if the rollers are sliding in the bearing. However, during transportation under bad conditions the rolling element weight might be enough to cause smearing.

The best way to reduce the risk of damage in installed spherical roller bearings is to axially preload one of the roller rows. The axial preloading should be around 10 % of the C value. In the bearing the rollers in one of the rows will be preloaded and the rollers in the other row completely free to move.

This method cannot be used for CARB bearings because of the very small contact angle for these bearings. With preloading there would be a risk of indentations. For CARB we recommend transportation with all rolling elements free to move. This is achieved by positioning the housing so that the radial internal clearance is the same in all positions of the bearing.



Failure modes

Most bearing damage in modern paper machines consists of minor surface damage as a result of inadequate lubrication and/or contamination or improper handling during mounting or dismounting. However, corrosion during standstill is perhaps the most common problem today. Other reasons for bearing damage are vibration marks and passage of electric current.

One bearing may be subjected to several failure modes at the same time, though these modes are in different stages of development. This is illustrated by the following examples of failure modes.

Normal fatigue

When a rolling bearing is rotating, and is loaded to a certain level, it is subjected to a phenomenon called fatigue. This occurs when a rolling body creates high, alternating stresses beneath the raceway surface. The most dangerous stresses are the shear stresses which change direction during every passage of a rolling element. If sufficiently high, these stresses cause a crack to form below the raceway surface (➔ **fig** 17). With the passage of time, this crack grows until eventually the material above the crack breaks away.

Normally, paper machine bearings are selected on a basis of life calculation using the well-known ISO equation for basic rating life. By definition, 90 % of the bearings will reach the calculated life before the first sign of normal fatigue occurs.

Fig 18 shows an early stage of spalling in a drying cylinder bearing. Note that the size of the spall at this early stage is only a few millimetres. Note too that this bearing has been running with adequate lubrication.

The aim for all bearing applications is that the bearings should not be damaged before normal fatigue develops. Unfortunately, it is rare for paper machine bearings to run until normal fatigue occurs.

Bearings might be damaged due to a number of reasons and fail prematurely, meaning that the service life of the bearing is shorter than the calculated life. Research by SKF shows that water also has a major influence on the bearing service life. The SKF recommendation is that water content in the lubricant should not exceed 200 ppm (0,02 %). According to laboratory tests water content of 0,1–0,5 % halves the bearing service life.

Fig 17

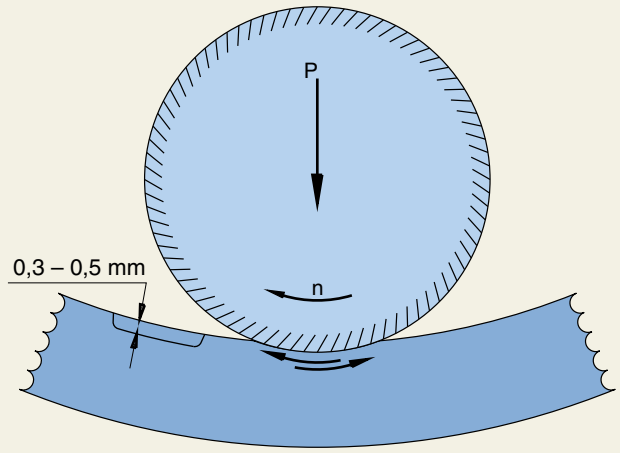

Spalling caused by fatigue

Spalling caused by normal fatigue

Fig 18



Premature failure due to indentations

If the lubricant contains hard contaminant particles larger than the oil film thickness or the bearings are handled in an improper way during mounting or dismounting there is a risk of heavy indentation to the surfaces in the rolling contact. Raised material, due to plastic deformation by heavy indentations, causes fatigue. The reason is the load concentration on the raised rim around the indentation.

When the fatigue reaches a certain level it leads to premature spalling starting at the far end of the indentation (➔ **figs** 19 and 20). The spalling starts as a crack beneath the surface and occurs sooner than normal subsurface spalling. This is why it is called premature. Subsurface spalls and also spalls starting at an indentation, are normally at least one millimetre in size.

The SKF Life Method makes it possible to calculate the life reduction caused by indentations. The most important operating data required for the calculation are the bearing type and size, the rotational speed, bearing load, oil viscosity at operating temperature and the size, hardness and concentration of the contamination particles.

Lubricant cleanliness, and careful handling during mounting are of course important factors in the prevention of heavy indentations. In some papermills around half of the failures in the paper machine are caused by improper mounting,because of lack of knowledge and improper mounting tools.

Spalling caused by indentation

Fig 19

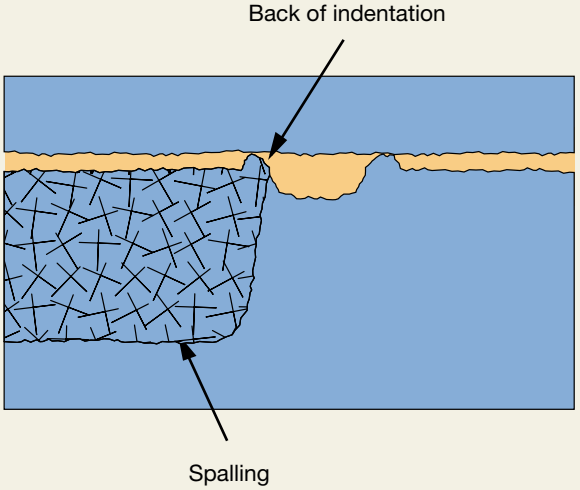

Spalling caused by indentation

Fig 20

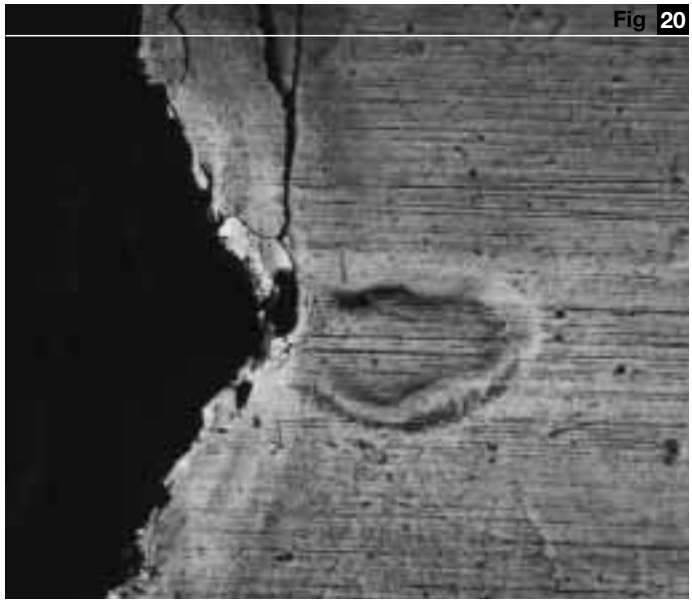

Premature failure due to abrasive wear

Abrasive wear is a relatively mild form of wear and does not cause any major problems until the internal geometry of the bearing changes too much. Abrasive wear occurs between two mating surfaces sliding in relation to each other. The sliding motion causes abrasive wear of the surfaces in much the same way as when a surface is sandpapered.

Sliding would not be expected to occur in rolling bearings, but in actual fact there is always some sliding in the rolling contact. In most cases this sliding is very small and therefore it is also called micro slip.

Fig 21 shows how micro slip occurs in spherical roller bearings, which are the most common type of bearings in paper machines. The roller surface speed will be highest at the middle of the roller where the diameter is greatest. The diameter at the ends of the roller is smaller which means a lower surface speed. This difference in surface speeds will lead to the micro slip in the rolling contact. While in rolling contact the distance slipped is short and long scratches will not be produced by contaminants although small particles will abrasively wear the raceway surfaces.

Fig 22 shows a bearing where abrasive wear has led to fatigue spalling. Two ridges remain where true rolling has taken place. Where micro slip has occurred there has been abrasive wear. When loading is concentrated at these ridges they become overloaded and fatigued, i.e. premature spalling occurs. The oil is almost certain to be equally contaminated in these true rolling zones but there is negligible abrasive wear. The two bands where true rolling has occurred are clearly visible in the photo showing a Yankee cylinder bearing (➔ **fig** 22). Note that the bearing in the photo is of an old design.

The best ways to avoid abrasive wear in paper machine bearings are to increase the oil film thickness, to improve the cleanliness of the oil, and use an oil with good AW properties.

Fig 21

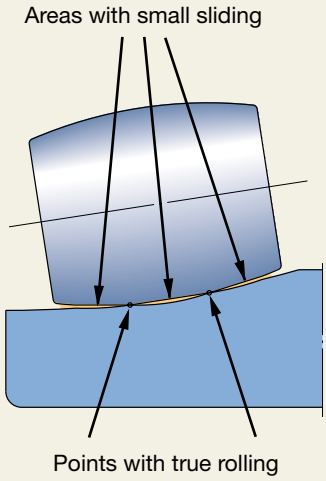

Small sliding in spherical roller bearings

Overload and spalling caused by wear

Fig 22

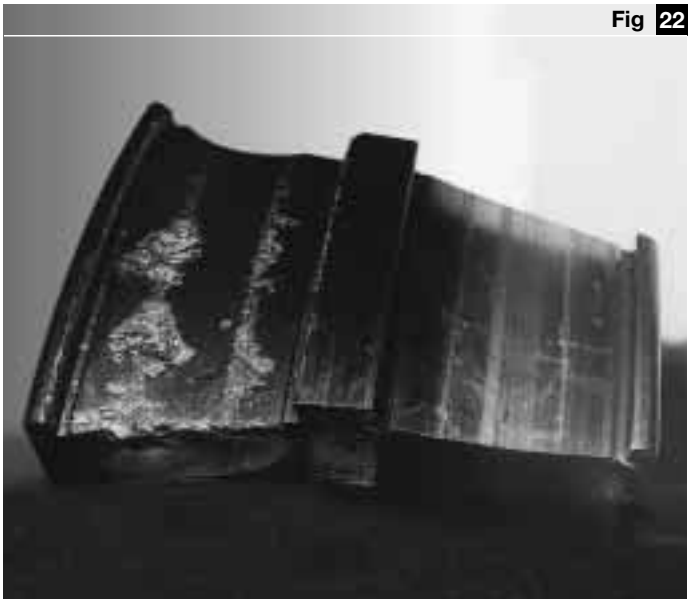

Polishing wear causes mirror-like surfaces

Fig 23

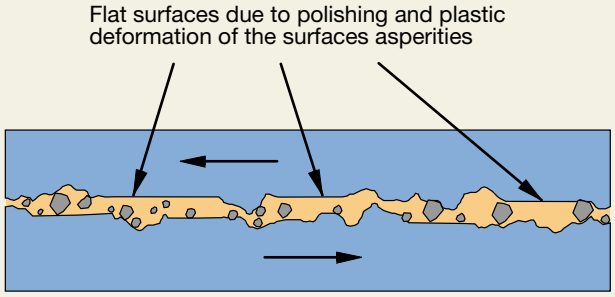

Polishing wear

The raceway surfaces of new roller bearings are shiny but not highly reflective. Therefore, mirror-like surfaces in a roller bearing mean that something, sometimes referred to as polishing, has happened during operation.

The most usual explanation for mirror-like raceway surfaces in a rolling bearing is that the bearing has been poorly lubricated, which normally means a thin oil film. A thin oil film allows metal-to-metal contact that leads to wear and plastic deformation of asperities (➔ **fig** 23).

Mirror-like surfaces are an advantage as long as wear and plastic deformation of the surface asperities are mild, i.e. the "treatment" of the surface is confined to the asperities only.

Sometimes mirror-like surfaces are combined with heavy wear (➔ **fig** 24). The question is how the surfaces can wear down by up to one millimetre and still be mirror-like? The explanation is that the surfaces have not been able to build up an oil film, despite the surface roughness improvement produced by the first polishing action. Viscosity of the oil is too low and there are a lot of very small abrasive contaminant particles in the oil. The bearing has been subjected to continuous polishing wear.

These microparticles are always present in a lubricant, but not every bearing with a thin oil film becomes polished. Why is this? It is presumed that there are additional factors influencing the start of the polishing wear process, e.g. a certain combination of low speed, heavy load and thin oil film.

The best way to avoid this kind of abrasive polishing wear is to increase the oil film thickness and use oils with good EP or AW properties.

Surface distress

There is a risk of surface distress in all bearings with a thin oil film. That risk is increased if there is sliding in the rolling contact. As stated earlier, rolling bearings show some sliding (also called micro slip) in the rolling contacts. Surface distress falls into two categories – general and local.

General surface distress is the consequence of asperities coming in direct contact under mixed or boundary lubrication conditions (➔ **fig** 25 **a**). When the loading and the frictional forces rise to a given magnitude, small cracks form in the surface and these cracks can in turn develop into microspalls (➔ **figs** 25 **b** and 25 **c**). Generally these microspalls are not visible to the naked eye, because they are only a few microns in size. The surface just looks dull and grey, but under a microscope a number of cracks and spalls can be detected.

Microspalls can also be caused by the EP additives being too aggressive, especially at elevated temperatures.

Polishing wear: Mirror-like surface combined with heavy wear

Fig 24

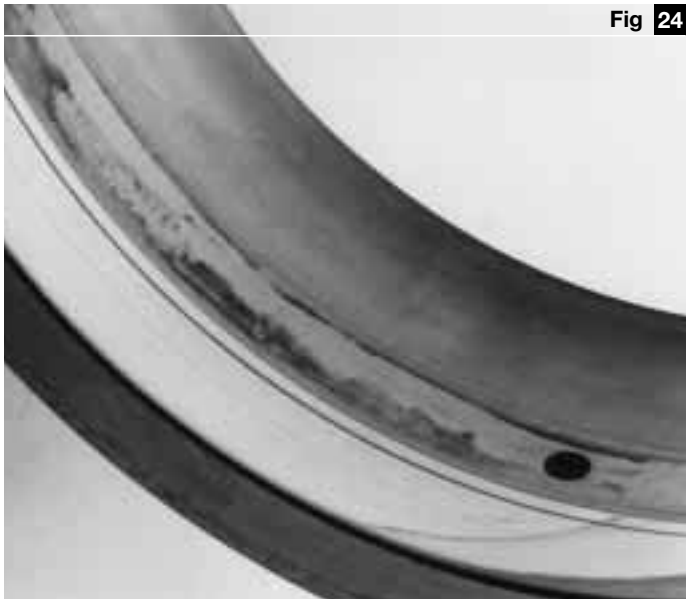

Surface distress: Micro spalling caused by metal-to-metal contact

Fig 25

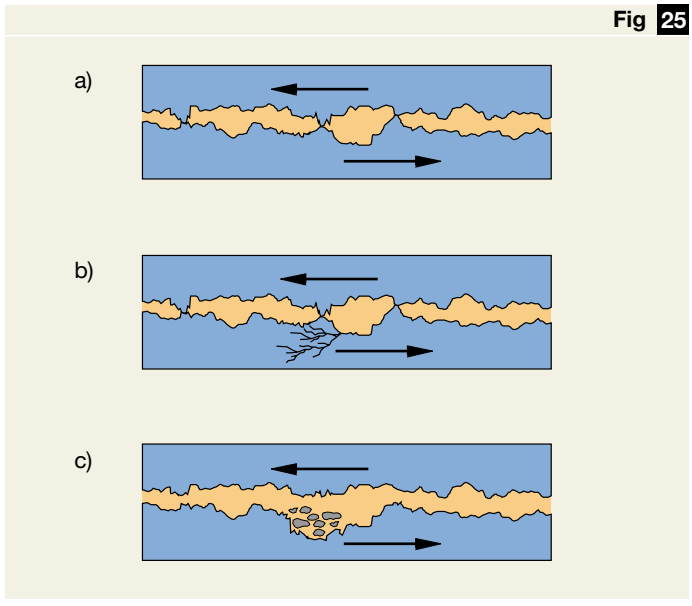

Fig 26

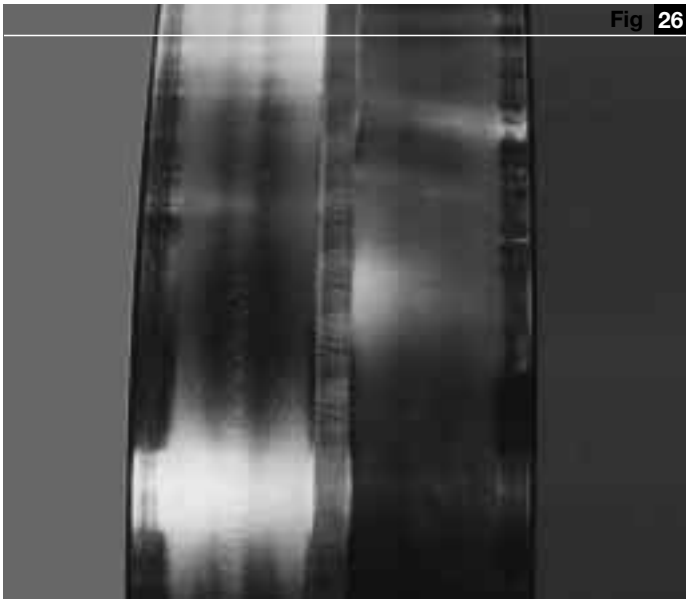

Dull surface due to micro spalling

Figs 26 and 27 show surface distress in an advanced stage, i.e. how microspalls have developed to medium size spalls of 10 to 100 µm in size. Note that the debris from microspalls can also increase the abrasive wear.

The best way to avoid general surface distress is to increase the oil film thickness and use oils with good EP or AW properties.

The second category of surface distress is called local surface distress.

Raised rims, as around heavy indentations, are even more likely to cause surface distress because the lubricating oil film can easily be broken at these local defects.

The risk of local surface distress and the load concentration on the raised rims are the reasons why bearings with heavy indentations should be replaced as part of the preventive maintenance programme.

Smearing

Smearing, just like most other lubrication-related damage, occurs between two mating surfaces sliding in relation to each other. The difference is that smearing is a severe type of wear that occurs at rolling contacts when the oil film is broken due to high sliding speed and/or heavy loads.

Therefore, smearing is not common in the rolling contact under normal operating conditions. The sliding speed must be much higher than in the slip mentioned on earlier pages.

One critical position is, for example, where the rollers are accelerated as they enter the loaded zone in bearings operating at high speeds. Another example of critical positions is the surfaces for cage centring.

In the old-fashioned spherical roller bearing design with a central integral flange on the inner ring (➔ **fig** 28) there is a great risk of smearing between the roller end and the flange. SKF nowadays do not manufacture such bearings.

Note that the two retaining flanges, that SKF also has on CA bearings (➔ **fig** 4**, page 14**) never are in contact with the roller ends and therefore never cause smearing.

Micro spalls in high magnification

Fig 27

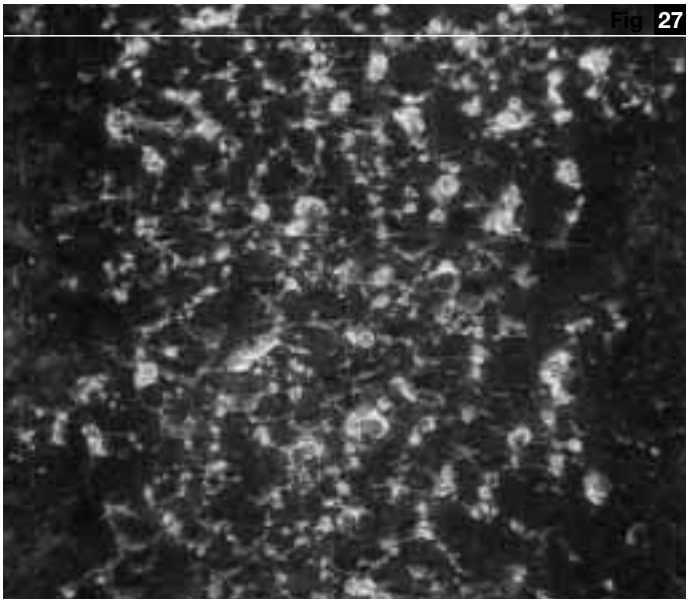

Old design, still used by some manufacturers

Fig 28

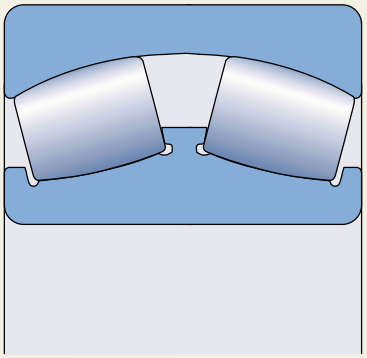

The heat generation in earlier mentioned sliding contacts may be so great as to cause the oil film to collapse. The two surfaces melt together at the points of metal-to-metal contact (➔ **fig** 29). This welding process causes material to be transferred from one surface to the other, which leads to higher friction as well. This phenomenon is also called galling, scuffing or adhesive wear.

Smearing is the most dangerous type of surface damage as the surfaces affected normally become progressively rougher. As the rough surfaces lead to decreased oil film with a lot of metal-to-metal contact, the bearing is in a vicious circle. In heavily loaded bearings smearing may lead to serious damage like blocked rollers due to a broken cage.

In lightly loaded bearings, which are common in paper machines, smearing normally leads to premature spalling, (➔ **figs** 30 and 31).

The best ways to avoid smearing in normally loaded bearings like those in press rolls is to increase the oil film thickness, to use lubricants with efficient EP additives and to reduce the water content in the lubricant.

In bearings with radial loads below those recommend in our General Catalogue, we recommend the use of NoWear bearings with coated rollers (L5DA). With such bearings the standard lubricant used for the other rolls in the calender can be used.

Fig 29

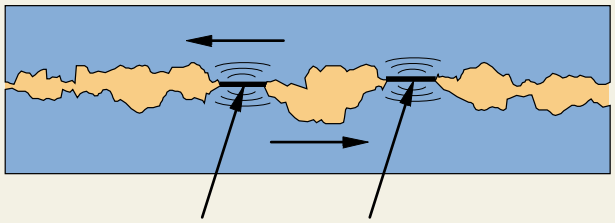

Heavy sliding causes smearing

There are also some polyglycol oils on the market that can prevent smearing. However, consideration needs to be given to cost and environmental issues with such oils.

Some polyglycols have a tendency to dissolve water, which in turn will decrease the lubricant viscosity and increase the risk of corrosion and hydrogen embrittlement.

Figs 30 and 31 Smearing normally leads to premature spalling

Fig 30



Fig 31

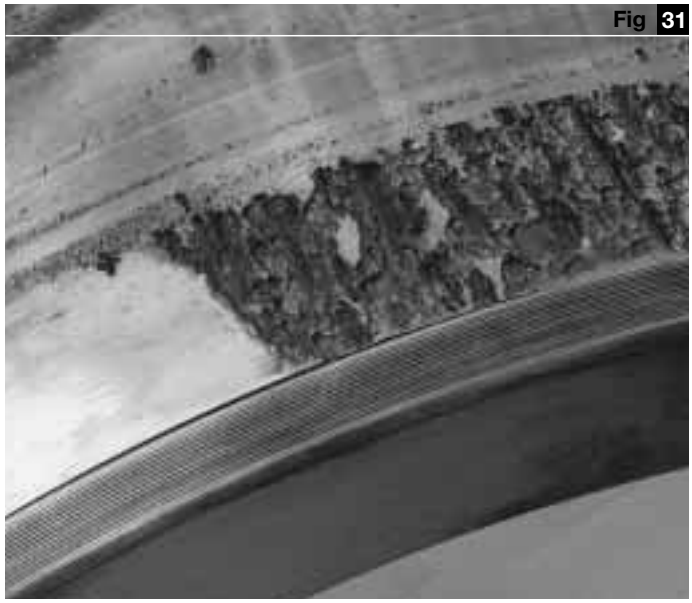

Corrosion

Corrosion is perhaps the most common reason for short service lives in paper machine bearings.

Bearing applications in paper machines are exposed to the ingress of water, especially in the forming and press section of the machine. Water, either from the papermaking process itself or from hosing down when the machine is cleaned, is very dangerous. The risk of corrosion is highest in non-rotating bearings, e.g. in the roll store.

If a non-rotating bearing has free water in the lubricant this water will accumulate at the bottom of the bearing. Concentration of the water will be highest at a certain distance from the rolling contact (➔ **fig** 32). The reason is that the free water in the oil, being heavier, will sink until it comes to a suitable gap between the roller and the raceway.

The bearings in the dryer section are subjected to another type of corrosion. High temperatures and aggressive chemicals may cause a type of corrosion referred to as etching. For example, some EP additives have proved to be aggressive at high temperatures.

Deep-seated rust usually leads to premature, extended spalling as the material is subjected to structural change and the area of the load-carrying surface is reduced to such an extent that overloading occurs.

Fig 33 shows a bearing which has developed deep-seated rust under static conditions.

The best way to avoid corrosion is to keep the lubricant free from water and to use a lubricant with good rust inhibitor additives.

Cracks

Normally some kind of initial damage is needed to cause ring cracking. Examples of initial damage are surface distress, indentation, smearing, corrosion, handling marks and mounting damage.

The best way to avoid ring cracking is to use case hardened rings. Therefore SKF recommends case hardened inner rings (HA3) for drying and Yankee cylinder bearings.

Water concentration in a stationary bearing

Fig 32

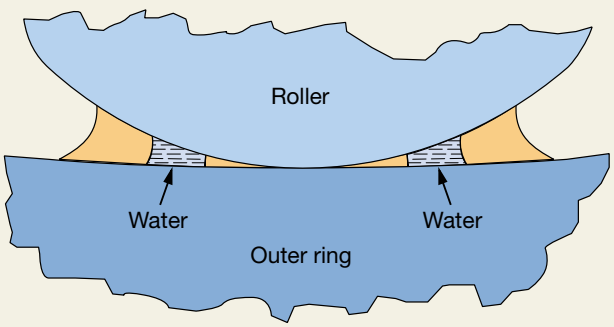

Deep-seated rust under static conditions

Fig 33



How to avoid surface damage

As mentioned, bearings in paper machines are subjected to different types of surface damage, mainly caused by insufficient lubrication. As such damage is often a combination of two or more failure modes it is difficult to propose a single action which can prevent the damage. The best lubrication conditions, i.e. smallest risk of surface damage, are obtained when all the guidelines in this handbook have been followed. However, **table** 3 can give some guidance on suitable actions when different types of surface damage have occurred.

In extreme cases, like smearing because of zero load in calenders, NoWear™ bearings can be a problem-solver. Please contact SKF for further details.

There are other special guidelines for the avoidance of damage to bearing contact surfaces. For example, in order to avoid premature spalling it is also necessary to ensure that hard particles and water are removed from the lubricant. Further information can be found under the heading "Cleanliness control" (➔ **pages 98–102**).

Sometimes one or two parameters are more important than the others. Viscosity ratio κ is one example of such an important parameter. Therefore SKF has some special guidelines for oil lubricated paper machine applications with respect to these parameters.

Guidelines

With the restriction below the following equation can be used as a rule of thumb when selecting κ_{min}:

$$\kappa_{min} = n \times d_m / 80\,000$$

where
κ_{min} = minimum value for κ
n = rotational speed, r/min
d_m = bearing mean diameter, mm

Restriction:
The equation is valid for κ values between 1,0 and 4,0 but in the case of bearings for heated rolls it is not always possible to achieve κ values above 1,0. In such cases it is permitted to

Recommended actions to avoid surface damage

Table 3

Recommended action	Type of damage: Abrasive wear	Polishing wear	Surface distress	Smearing (welding at normal load)	Smearing (welding at light load)	Corrosion etching	Inner ring cracking
Increase the oil film thickness (κ-value)	X	X	X	X			
Improve AW additives	X	X	X				
Improve EP additives		X	X	X			
Decrease activity of EP additives (sulphur/phosphorous type at elevated temperatures)			X			X	
Improve water extraction			X	X		X	
Improve particle removal	X		X				
Improve rust inhibitor additives						X	
NoWear™	X		X	X	X		
Case hardened inner ring (HA3)							X

extend use of the equation to the κ_{min} range of 0,25 to 1,0 with reasonable accuracy. SKF experience is that very little is gained by increasing the κ value above 4,0.

The equation for the κ_{min} value is based on the risks of surface distress and smearing, which in turn are dependent on the bearing size and speed. The bearing load also has influence but, in the case of paper machine applications, the load is normally very light. When lubrication is selected by using this equation the risks of surface distress at low speeds and of smearing at high speeds are very low. The best thing would be if $\kappa = 4,0$ could be applied to all the bearings, but this is not possible with the oils and lubrication systems in common use. Therefore, the κ_{min} equation is also based on a limited range of standard oils for, and on common oil flow rates in, modern paper machines. Slightly higher κ values than κ_{min} can be attained for most paper machine bearings, especially in the forming and press section, and will further reduce the aforementioned risks. One exception, where the κ_{min} value cannot be reached, is drying cylinders without journal insulation or with very high steam temperature. Dryer bearings in such machines are therefore subjected to higher risks of surface distress. When optimal lubrication is required, each application has to be calculated separately by SKF. Note that the above equation and the examples included in this handbook are to be used as general guidelines only!

Index

A

Abrasive wear 202
Acceleration enveloping 194
Additives 88
Air drying 54
Air humidity 197
Anti-corrosion additives 88
Anti-foam additives 88
Anti-oxidation additives 88
Automatic grease lubrication 91
Availability 184
AW (Anti-Wear) additives 89

B

Ball bearings 16
Basic rating life 10-11, 86-87
Blade former 30
Board machines 9
Boundary lubrication 84-85
Breaker stack, ... 54, 65
Breast rolls 32, 106-109

C

Calenders 9, 69
CARB 15
Case hardened bearings 56
CC (Crown Control) roll 40
Central roll 41
Centrifugal water extractors 98
Ceramic coating 26
Cleanliness 12, 201
Cleanliness control 98
Clearance 16
Clearance reduction 187
Coating section 9
Coefficient of friction 13, 26
Condition monitoring 193
Contamination 12
Cooling 26
Corrosion 93, 206
Couch roll 9
Cracks 206
Cylindrical roller bearings 17

D

Dandy rolls 29
Deep groove ball bearings 17
Deflection-compensating rolls 42, 46-47, 74, 126-127
Deflection-controlled press roll 41
Designations 16-17
Detergent additives 89
Dispersant additives 89
Doctor bearings 16
Doctors 52, 66
Double felt run 51
Downsizing 12-15
Drive groups 52-53
Drive side 13
Dryer hood 51
Drying section 9, 51, 53
Drying cylinder housings 18, 56, 59
Drying cylinders ... 52, 56, 58-59, 132-144

E

Endurance life tests 10
EP (Extreme Pressure) additives 89
Explorer 15

F

Failure modes 200
Fatigue life 10-11, 200
Felt rolls 33, 43, 56, 118-121, 128-131
Felt roll housings 18, 56
Felt run 51
Filter rating 99
Fine paper machines 9
Flaking 10
Flushing 100
Forming section 9, 29
Forward drive rolls 32, 106-109
Fourdrinier machine 29
Front side 13
Full lubrication 84-85

G

Gauging taper deviation 23-24
Gear drive 54
Granite rolls 44
Grease lubrication 91
Guide rolls 33, 43, 162-165

H

Heated press rolls 42
Heaters 186
Heat treatment 16
High precision bearings 26
High pressure cleaning 196-197
High speed machines 26
HMV nuts 186
Hood 55
Housings 18
Hydraulic diameter 24
Hydraulic nuts 186
Hydrostatic shoes 42

I

Impulse drying 42
Indentations 201
ISO standard 12, 86, 99

J

Journal insulation 56
Journals 18
Jumbo rolls 77

K

Kinematic viscosity 86
KPI (Key Performance Indicators) 184

L

Labyrinth seal 20
Linear load 39
Liner machines 9
Locating side 13
Low load 26
Lubricant viscosity 12
Lubrication 83
Lubrication systems 95-96

M

Machine calendering 69
Machine efficiency 181-182
Machine glazing 69
Maintenance 181
Marlin 194
Mean rotational speed 79-80
MG cylinders 54, 62
Microlog 194
Mineral oils 96
Minimum life 10
Misalignment 13
Mixed lubrication 84, 85
Multi-nip press 39, 41
Multi-parameter monitoring 193
Multi-row radial ball bearings 16

N

NAS standard 98-99
Newsprint machines 9
NLGI index 92
Non-locating side 13
NoWear bearings 26, 73

O

Oil analysis 101-102
OilCheck monitor 102
Oil film 84-85
Oil filters 99
Oil flow resistance 24-25
Oil injectors 186
Oil outlet 21
Oil pumps 186
Oil sampling 102
OME (Overall Machine Efficiency) 181
Operating speeds 9, 26
Oscillating doctors 66
Outsourcing 184

P

Parametric studies 12
Particle content 98
Particle counting 99
Plain bearings 17
Plain calender rolls 72-73, 166-175
Plain press 39
Plain press rolls 44
Polishing wear 202-203
Predictive maintenance 182
Press rolls 44-45, 122-125
Press section 9, 39
Preventive maintenance 182
PRISM4 195
Proactive maintenance 183
Pullers 186
Pulp drying machines 9

R

Radial run-out 26
Reactive maintenance 182
Rebuilding 185
Recommended bearing life 11
Reel drums 78, 176-179
Reeler 9, 77
Reel spools 79
Regrinding 26
Reliability 182-184
Relubrication 93-94
Rewinders 77
Rocker housings 19, 58, 63
Roll former 30
Rotating misalignment 47
Running accuracy 16, 26, 47

S
Seals 20
Self-aligning ball bearings 17
Service life 10-11
Shake rail 33
Shoe press 40
Single felt run 51
Single nip press 39, 65
SKF Drive-up method 186-190
SKF Life Method 12, 87
Slitters 77
Smearing 26, 204
Soft calender 26, 70-71
Spalling 10, 200-201
Speed rating 26
Sphered housing 32
Spherical roller bearings 14-15
Splash guard 20
Spool 77
Standstill precautions 196
Steam joint 56, 59-60
Steam temperature 10
Storage of bearings 197
Stretch rolls 33, 43
Suction press 40
Suction press rolls 46, 146-147
Suction rolls 35-37, 114-117
Supercalenders 69, 70
Surface coating 26
Surface damage 207
Surface distress 203
Synthetic oils 96

T
TAD (Through air drying) 55
TAPPI 11
Thermal expansion 59
Termo rolls 26
TFO (Trouble-Free Operation) 184
Tissue machines 9
Tolerances for abutments 22
Tolerances for cylindrical form 22
Tolerances for dimension 22
Tolerances for tapered journals 22-23
Top wire former 31
Toroidal roller bearings 15
Transport damage 199
Trends 13
Triple ring bearings 47-48
Twin wire machine 30

U
Unplanned stops 55, 181-182
Uptime 183

V
Vacuum rolls 52
Vacuum water extractors 98
VI (Viscosity Index) improvement additives 89
Vibration 26
Viscosity class 86
Viscosity index 86

W
Washout resistance 93
Water content 98, 100, 102
Water extractors 98
Wear 26
Wide nip press 40
Wire changing 32
Wire rolls 33-34, 110-113
Wire section 9, 29

Y
Yankee cylinder housings 19, 62-63
Yankee cylinders 54, 62-63, 148-161

Z
Zone-controlled deflection-compensating rolls 42, 48

.